T&S BRASS AND BRONZE WORKS, INC.
2 SADDLEBACK COVE / P.O. BOX 1088 / TRAVELERS REST, SC 29690
PHONE 800-476-4103 FAX 864- 834-3518

REG.#A2601
ISO #9001

Model No.
B-7222-C02
Item No.:

Job Name:

Architect/Engineer Approval:

Notes:

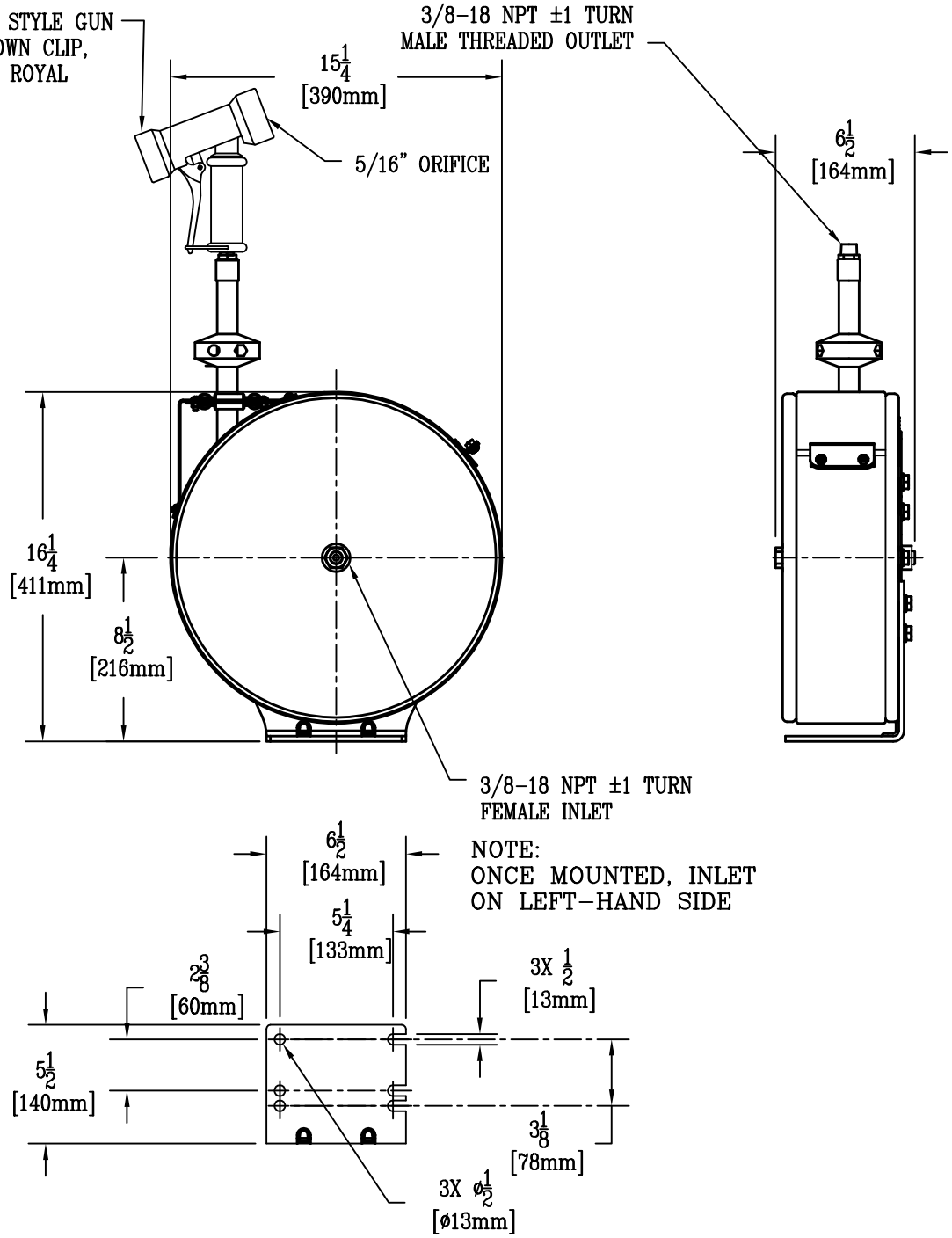

Product Description:	Drawn:	Checked	Scale:
HOSEREEL, CLOSED, EPOXY POWDER COATED STEEL 30 FT OF 3/8 DIA. BLUE HOSE AND MV-2516-24 REAR TRIGGER, 5/16" SPRAY GUN	JRM	JHB	1:8
	Approved		Date:
	JHB		6/09/05