General Guidelines for Installing the Mr.Steam® Steambath System

PUR 100431 5/12

mr steam®

www.mrsteam.com
EAST COAST 800-76-STEAM
WEST COAST 800-72-STEAM

For additional and important detailed Installation, Operation and Maintenance information, it is strongly recommended that reference be made to the Mr.Steam® Residential Steambath Generator Manual PN 101289 or contact Mr.Steam® at 1-800-76-Steam, hello@mrsteam.com or visit www.mrsteam.com

Locating the Mr.Steam® Generator

Select a location as near as practical to the steam room.

Typical locations include: closet, vanity cabinet, heated attic or basement.

1 .Locate steambath generator within 50 feet of steam room. Note: The standard length of the cable for connecting the control to the steam generator is 30 feet. The steam generator and control must be located accordingly. A 60 foot cable (PN 103990-60) is available as a special order part.

2.DO NOT install steambath generator inside steam room.

3.DO NOT install steambath generator outdoors or wherever environmental conditions may affect the safety and/or performance of the generator.

4.DO NOT install steambath generator or plumbing lines in unheated attic or any locations where water could freeze.

5.DO NOT install steambath generator near flammable or corrosive materials or chemicals such as gasoline, paint thinners, or the like. Installation in areas having high concentrations of chlorine (such as pool equipment room) must be avoided.

6.Install steambath generator on a solid and level surface. Keyhole slots are provided for wall mounting. Insure the steam generator is properly secured and level when mounting with keyhole slots.

7.Install steambath generator in an upright position only. Install a pressure reducing valve to limit supply to 15-20 PSIG

8.Install anti-water hammer device as necessary.

9.Provide a minimum of (12) inches at both ends and top of the steam generator or as required for servicing.

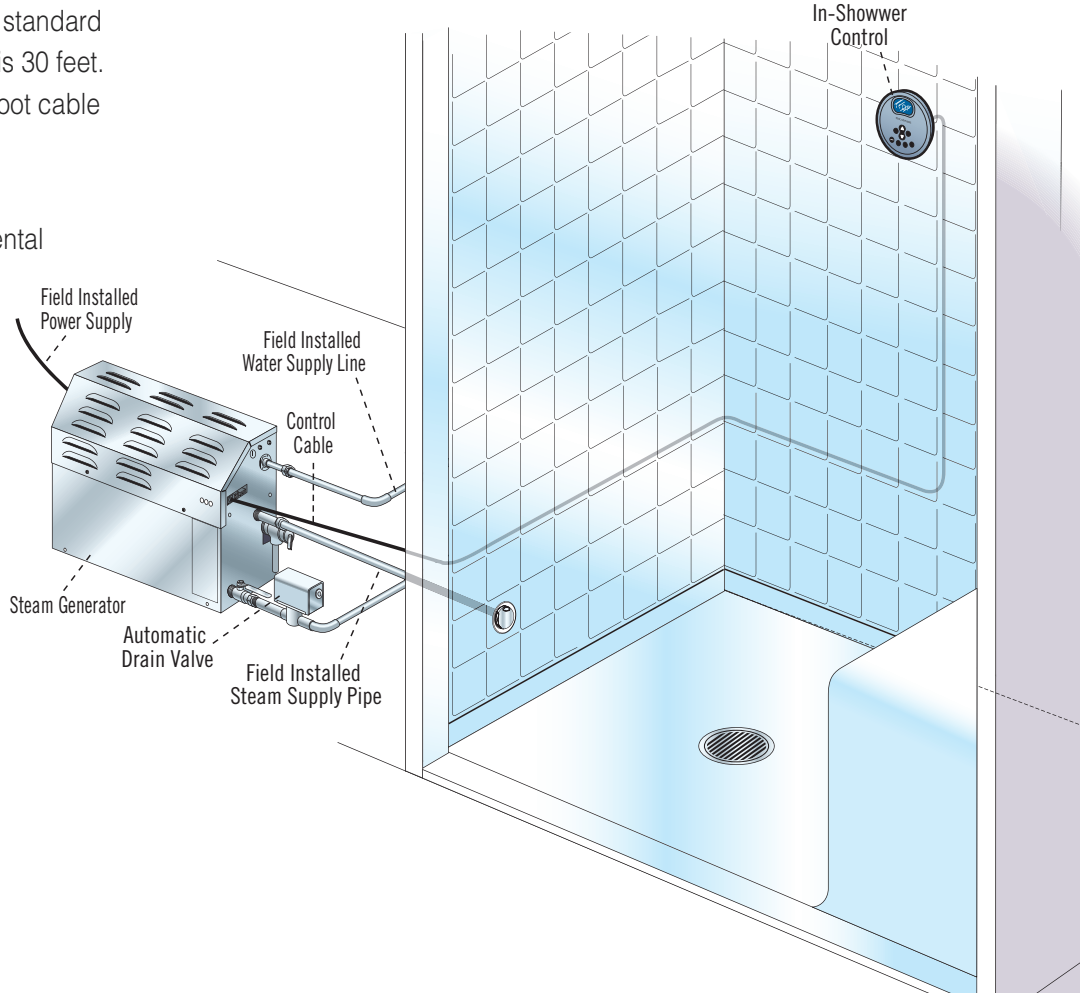

For Illustrative purposes only. Consult with qualified designer, architect or contractor for steamroom construction details.

Field Power Supply Connection

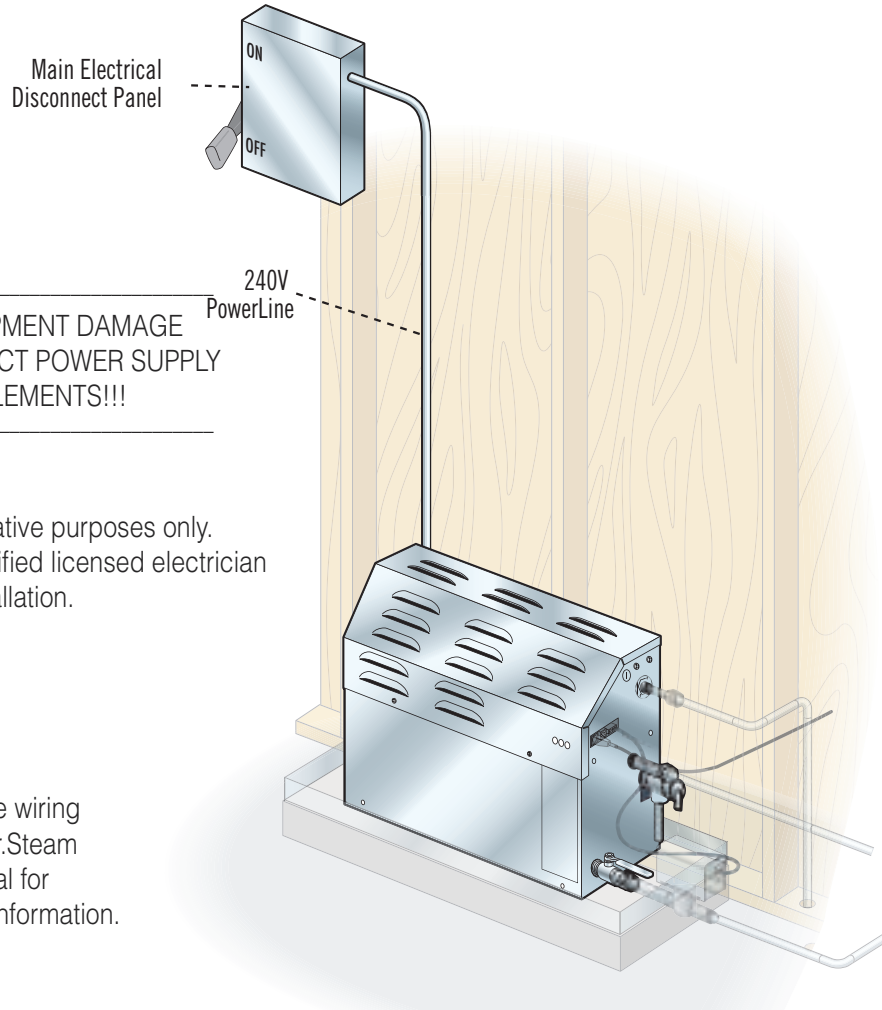

TO AVOID EQUIPMENT DAMAGE
DO NOT CONNECT POWER SUPPLY
DIRECTLY TO ELEMENTS!!!

NOTE: For illustrative purposes only. Consult with qualified licensed electrician for electrical installation.

L1, L2, Ground
to be field wired

Please refer to the wiring diagram in the Mr.Steam Installation Manual for complete wiring information.

Models MS 90E – MS 400E (single phase wiring shown)

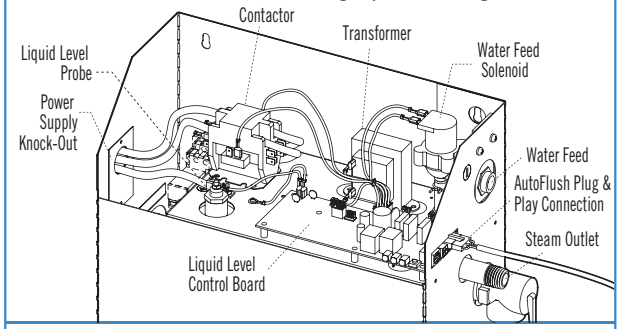

Models MS Super 1E - 6E (single phase wiring shown)

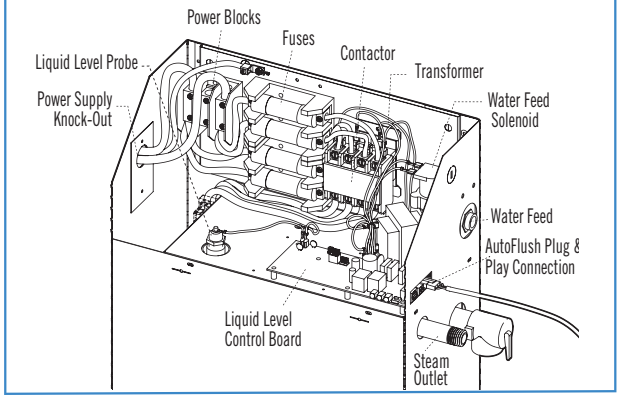

** Super 1 is not internally fused*

1" Air Gap Indirect Drain System.
Check local plumbing code for
receptor, trap and vent requirements.

For Illustrative purposes only. Consult with qualified designer, architect or contractor for steamroom construction details.

Water Feed

1. Connect hot or cold water line. Hot water line is preferable, however hot water should not exceed 160˚ F.
2. Provide a shut off valve in the water supply line upstream of the steambath generator.
3. Do not overheat inlet solenoid valve with solder connections. Overheating will damage parts.
4. Flush inlet water line thoroughly before making connection to unit.
5. Strainer recommended upstream of feed water connection.
6. For best performance water pressure should be 15 to 20 PSIG. Reduce pressure as required if necessary.
7. Provide anti-water hammer device as required.
8. As required by local codes, install an approved backflow preventer.

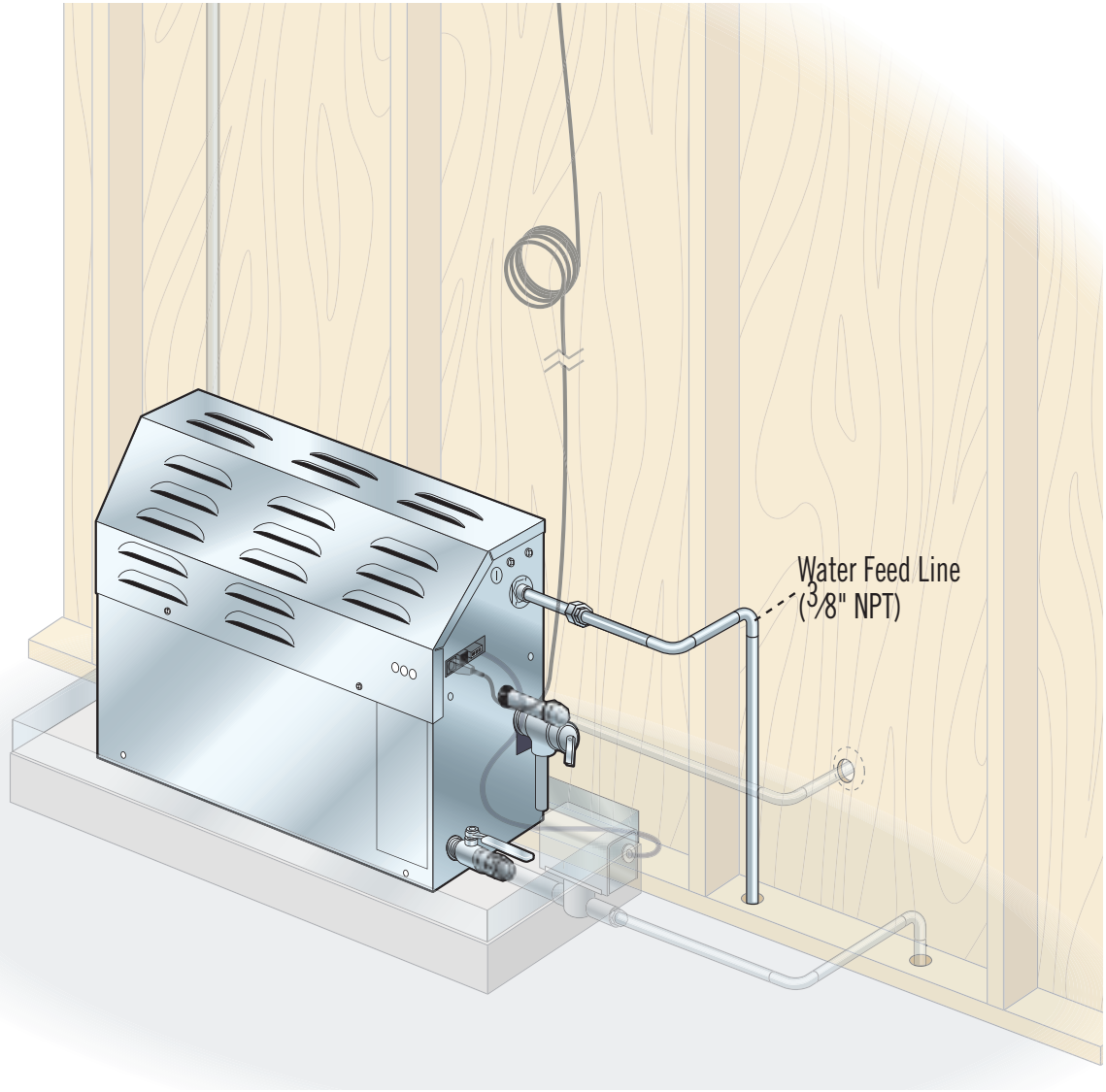

For Illustrative purposes only. Consult with qualified designer, architect or contractor for steamroom construction details.

Steam Outlet Pipe

Steam Outlet (½" NPT)

1. Do not install any valve in steam line. Flow of steam must be unobstructed.
2. Use ½-inch brass pipe or copper tubing from unit to steam head as permitted by codes.
3. Insulate steam line using pipe insulation rated 250˚ F or higher.
4. Pitch steam line ¼" per foot towards steam head or steam generator to avoid valleys and trapping of condensate.

NOTE: Running the steam line down and then up will create a steam trap blocking the flow of steam.
NOTE: A 1.5" hole in the steamroom is required to mount the steamhead.

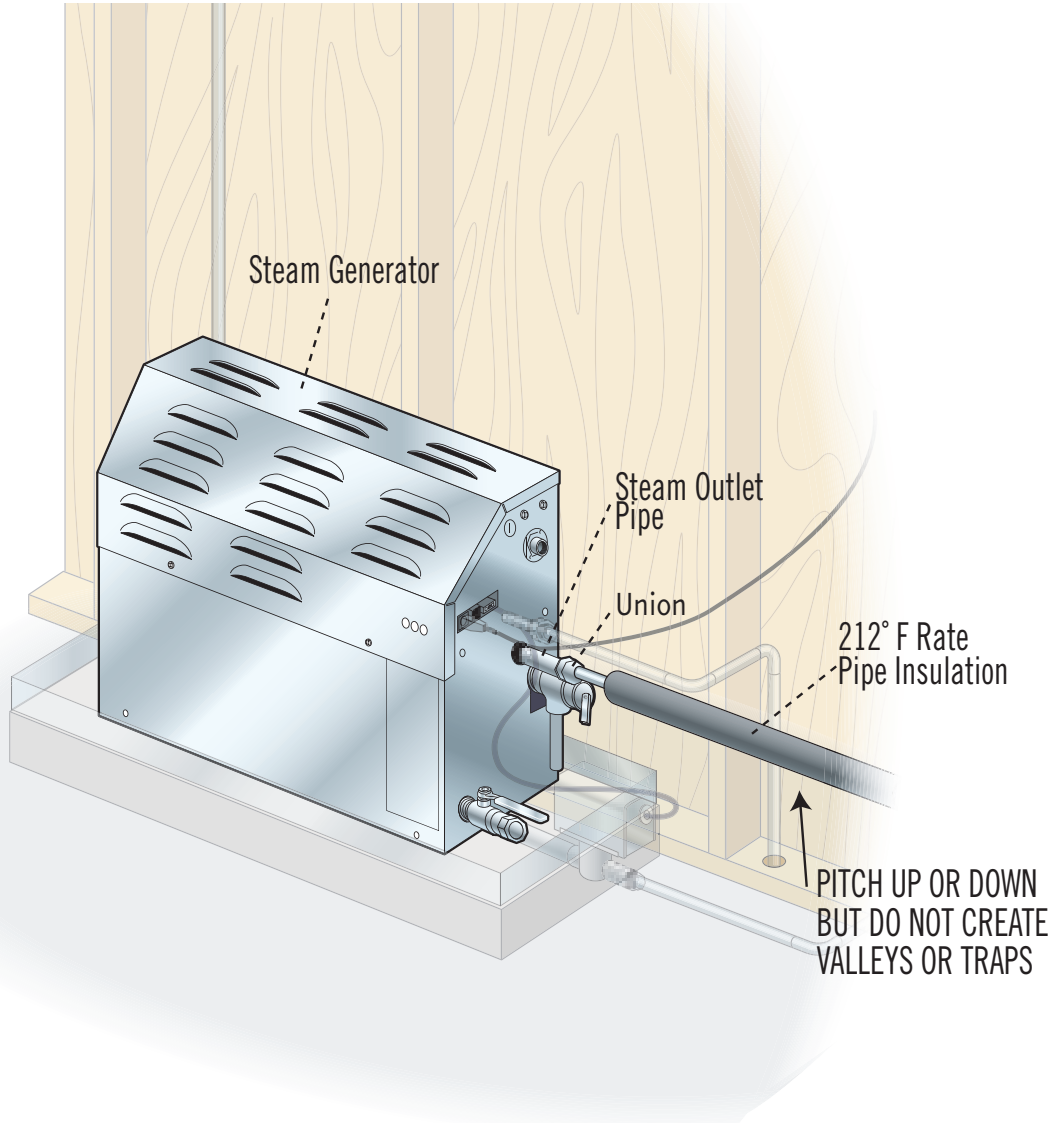

For Illustrative purposes only. Consult with qualified designer, architect or contractor for steamroom construction details.

Manual Drain Line

Drain (½" NPT)

NOTE: A drain valve is provided to facilitate servicing. Provide a drain line connection from steambath generator drain valve according to National and local Codes.
Check local plumbing code for receptor, trap and vent requirements.
Unit drains by gravity.

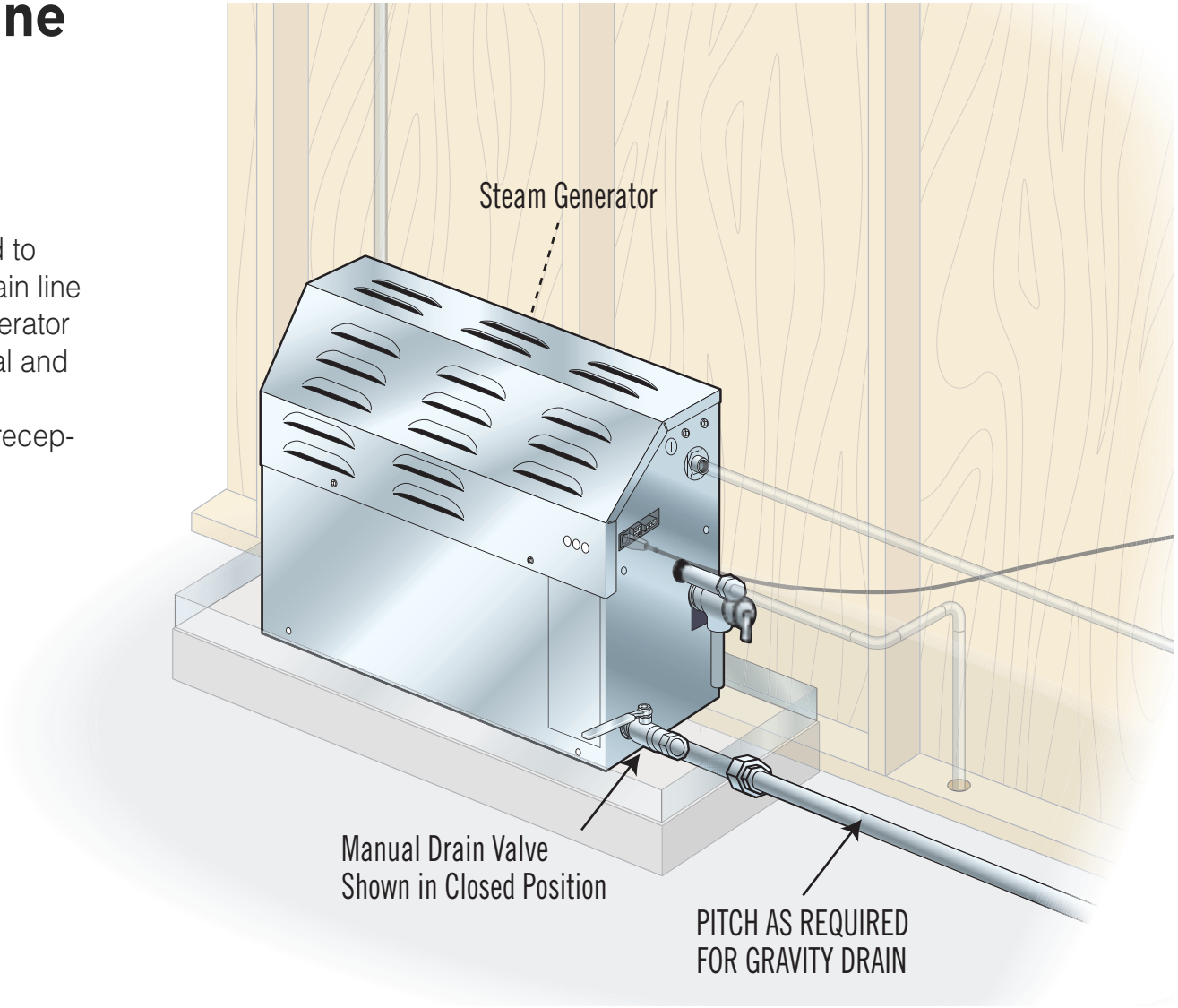

For Illustrative purposes only. Consult with qualified designer, architect or contractor for steamroom construction details.

Optional AutoFlush

Operation

The optional AutoFlush System feature automatically drains the Mr.Steam® system following each use. A time delay allows the water to cool down (about two hours) before it drains by gravity for a safe and gentle operation.

NOTE: If the Express Steam option has been installed, the AutoFlush will drain for ten minutes then refill with fresh water to begin the pre-heat cycle.

Installation Instructions

1. Plumbing to be performed by a qualified plumber and shall be in accordance with applicable national and local codes. Unit drains by gravity. A drain line that is lower than the AutoFlush assembly must be available. The AutoFlush System valve outlet is threaded ½" NPT. Check plumbing code for receptor, trap and vent requirements.

2. Use copper or brass nipple ½" NPT x 3½" or longer (not supplied) to connect AutoFlush valve (end "B") to the Drain Valve (valve end "A" and "B" are indicated on bottom of AutoFlush Valve)

CAUTION PROVIDE DRAIN PLUMBING ACCORDING TO LOCAL CODES. PLUMB AS REQUIRED FOR AUTOFLUSH SYSTEM.

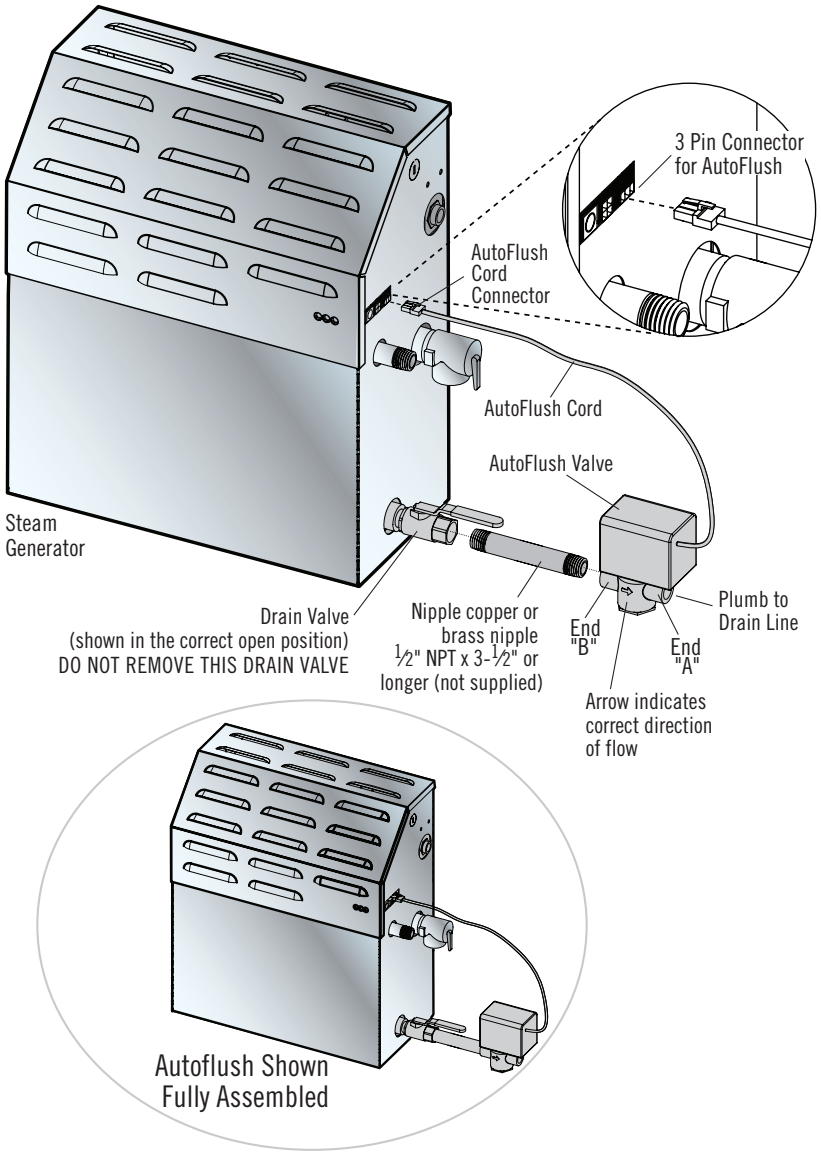

Drip Pan

PN 103867

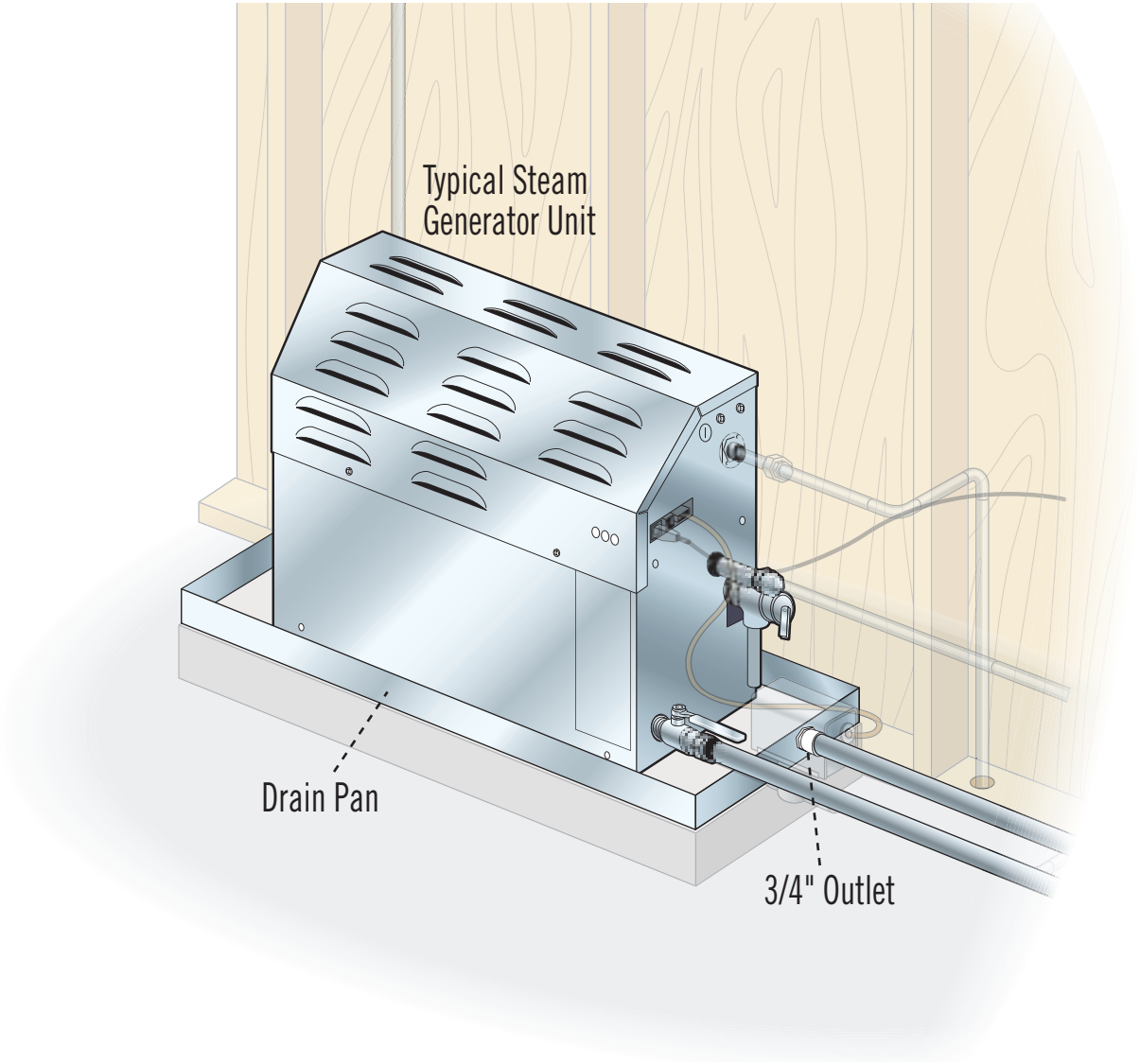

For Illustrative purposes only. Consult with qualified designer, architect or contractor for steamroom construction details.

Express Steam

(only available factory installed)

Suitable for all MS Models.

Express steam is equipped with a low power heating element and thermostat to keep the water in the tank warm enough to bring up steam quicker. All express steam components and wiring are installed at the factory.

No additional wiring or plumbing is required by installers.

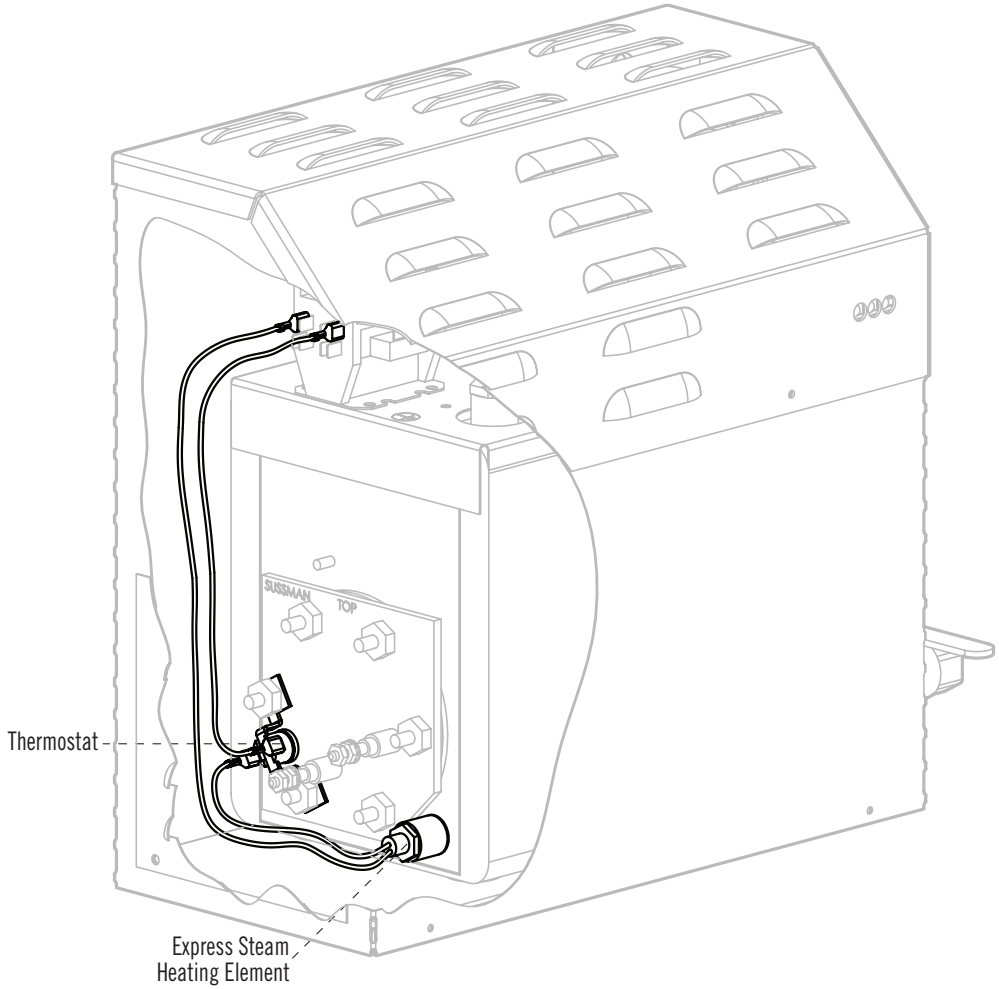

Parts

MS SUPER 2E shown

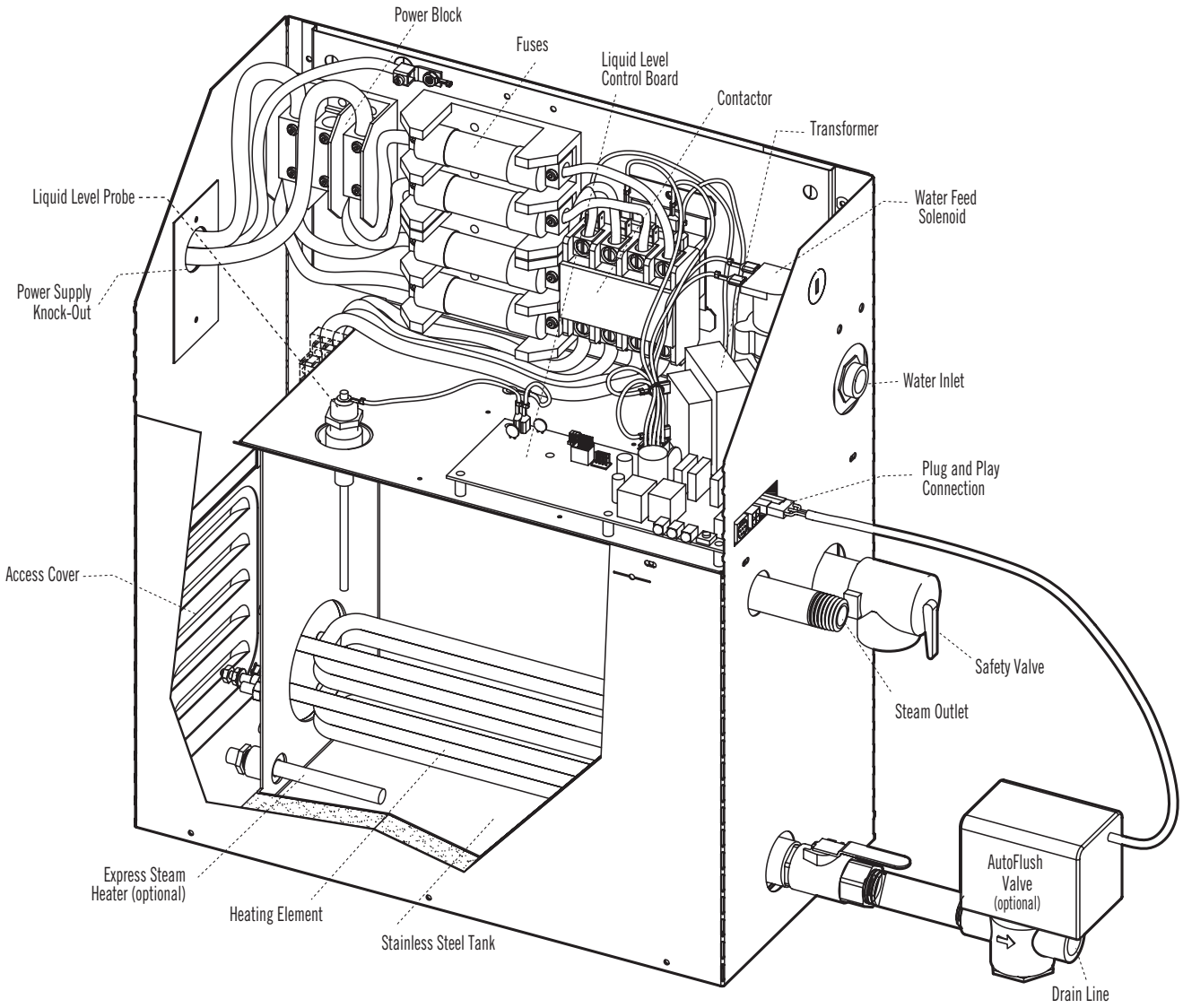

Tandem Steam Generator Installation (MS Super 4E, 5E & 6E)

Refer to the Mr.Steam Installation manual for additional installation information.

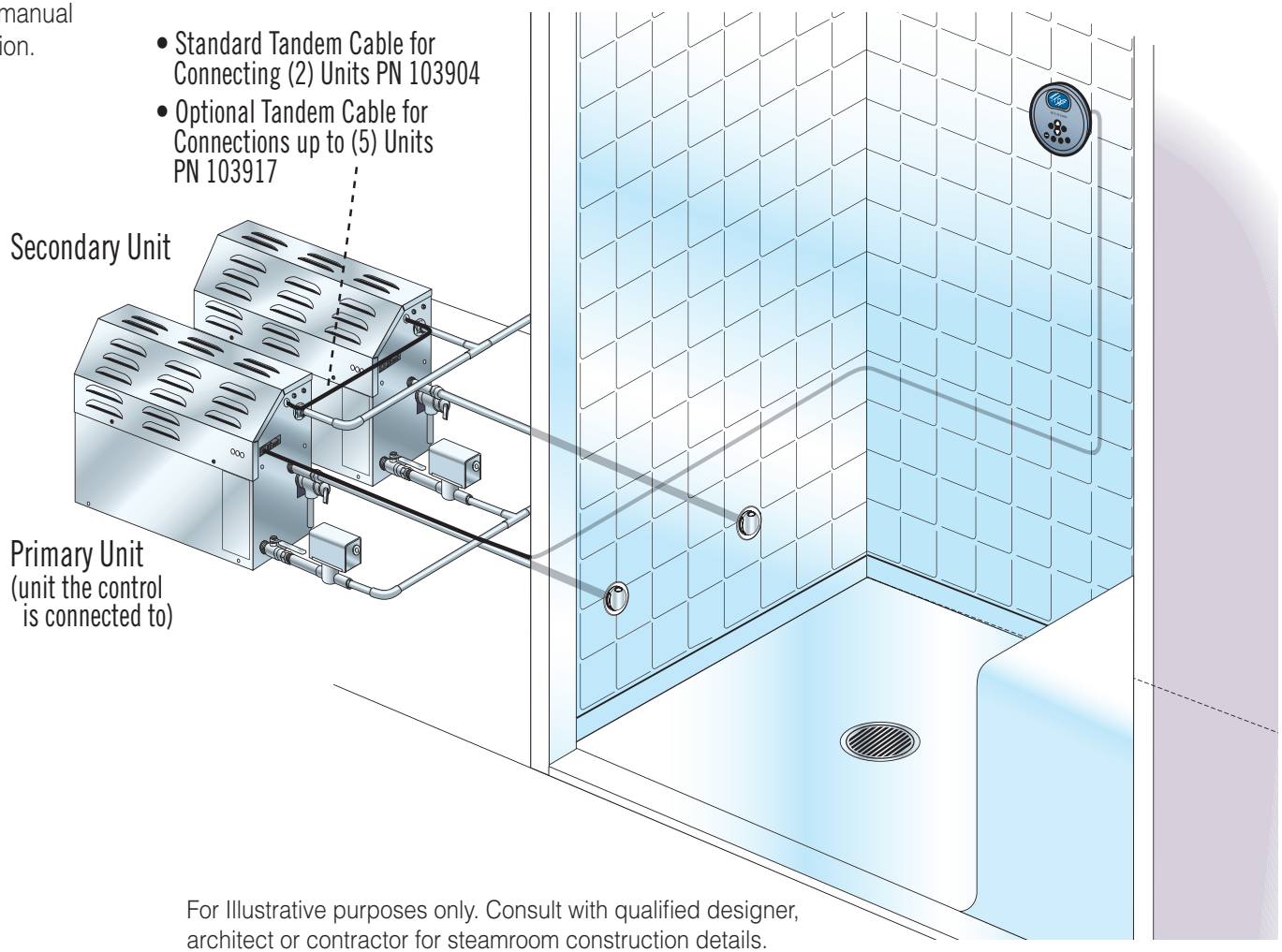

For Illustrative purposes only. Consult with qualified designer, architect or contractor for steamroom construction details.

eTempo® and eTempo/Plus® Controls

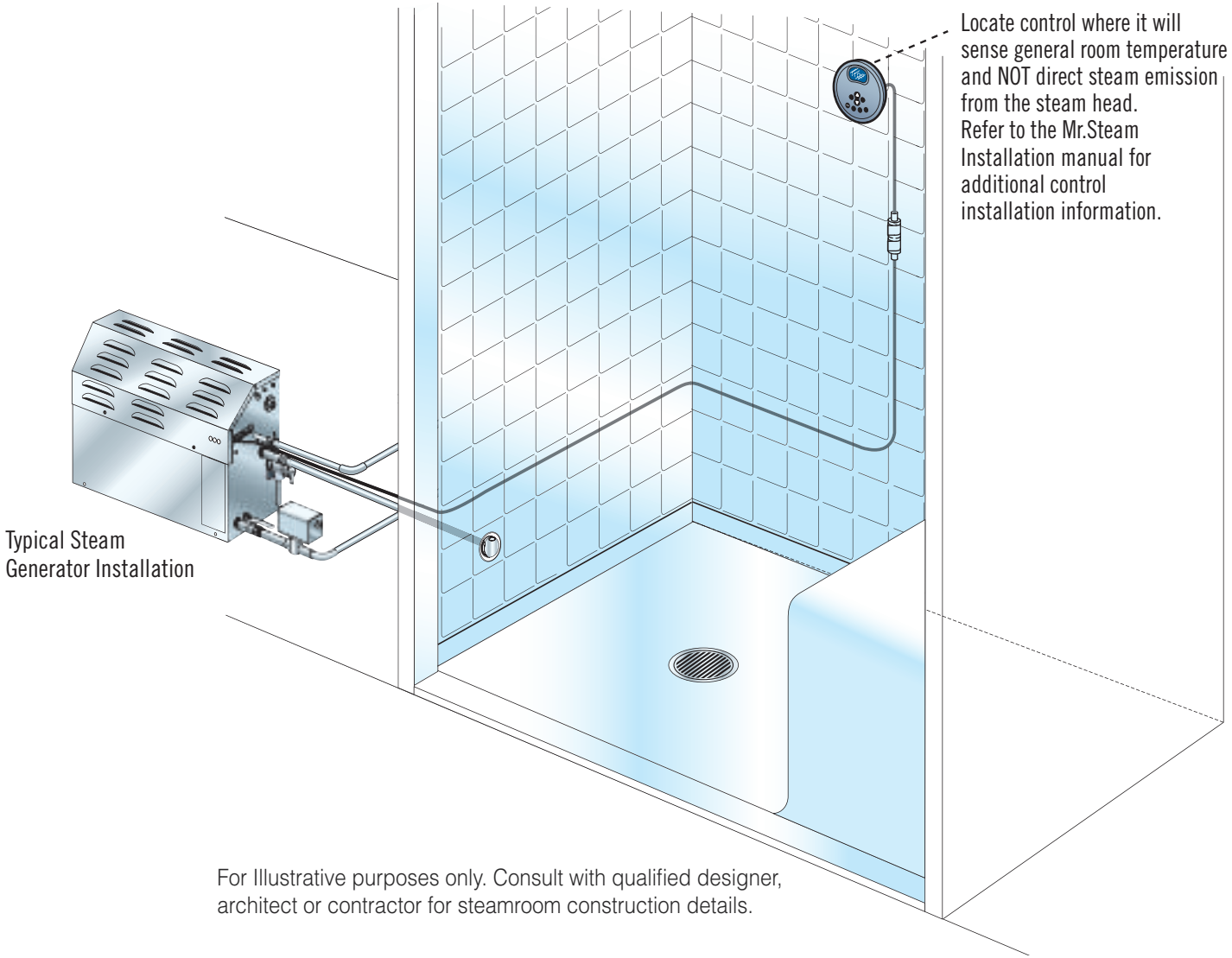

For Illustrative purposes only. Consult with qualified designer, architect or contractor for steamroom construction details.

Installing the eTempo® or eTempo/Plus® Control

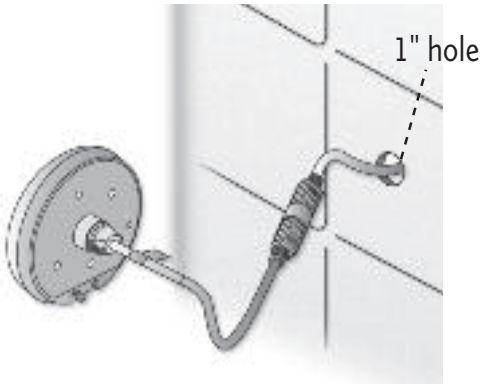

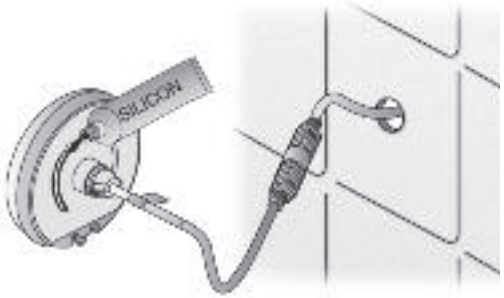

1. Firmly connect the connector to the control. Turn on power to the steam generator and test the control to verify correct connections. Test per instructions. Proceed with installation and verification of proper control function.

IMPORTANT: Turn power to the steam generator OFF before installing the control. Failure to turn the power off will result in an inoperable control.

2. Remove & discard peel-off paper to expose adhesive liner
3. Run a bead of silicone (provided) as shown to the C shaped groove.

IMPORTANT: Do not apply excessive amounts of silicone. Do not apply silicone to any other parts of the control including the adhesive gasket.

4. Insure the mounting surface is clean and dry as required for good adhesion. Apply silicone into the hole in the wall as required to create a moisture seal. Hold the control with the LED display in the 12 o'clock position and press the control against the wall until the adhesive sticks and holds firmly as shown above.

Connecting the Control Cable to the Steam Generator

Route the control cable (provided with the control) from the wall cutout to the steam generator.

IMPORTANT: Do not strain, staple, pinch or otherwise damage the control cable. Route cable as required to permit replacement.

The 30' (and optional 60') control cable features identical Mini-Din connectors at both ends.

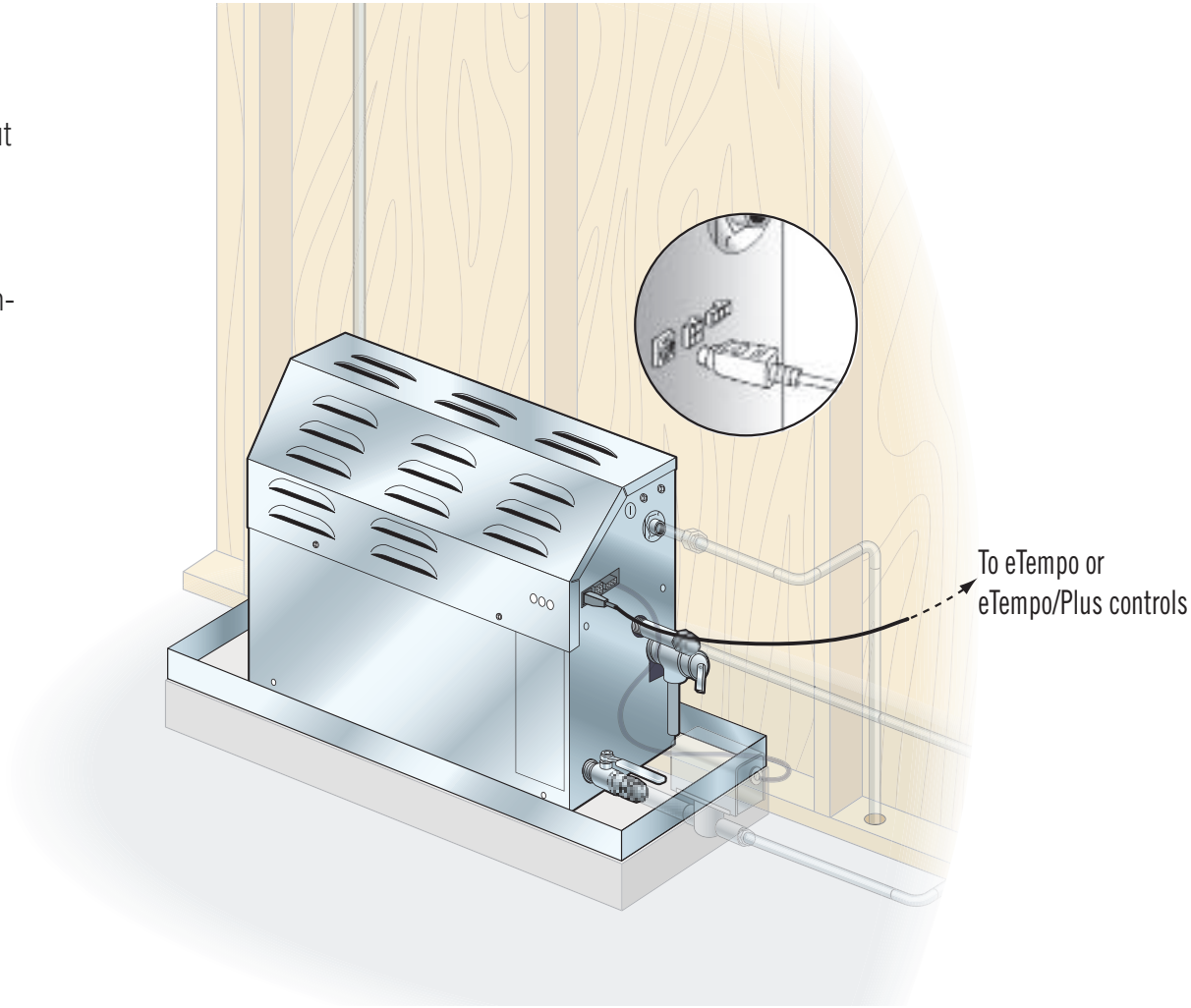

For Illustrative purposes only. Consult with qualified designer, architect or contractor for steamroom construction details.

Locating the eTempo® or eTempo/Plus® Control Outside the Steam Room by Using Remote Temperature Sensor

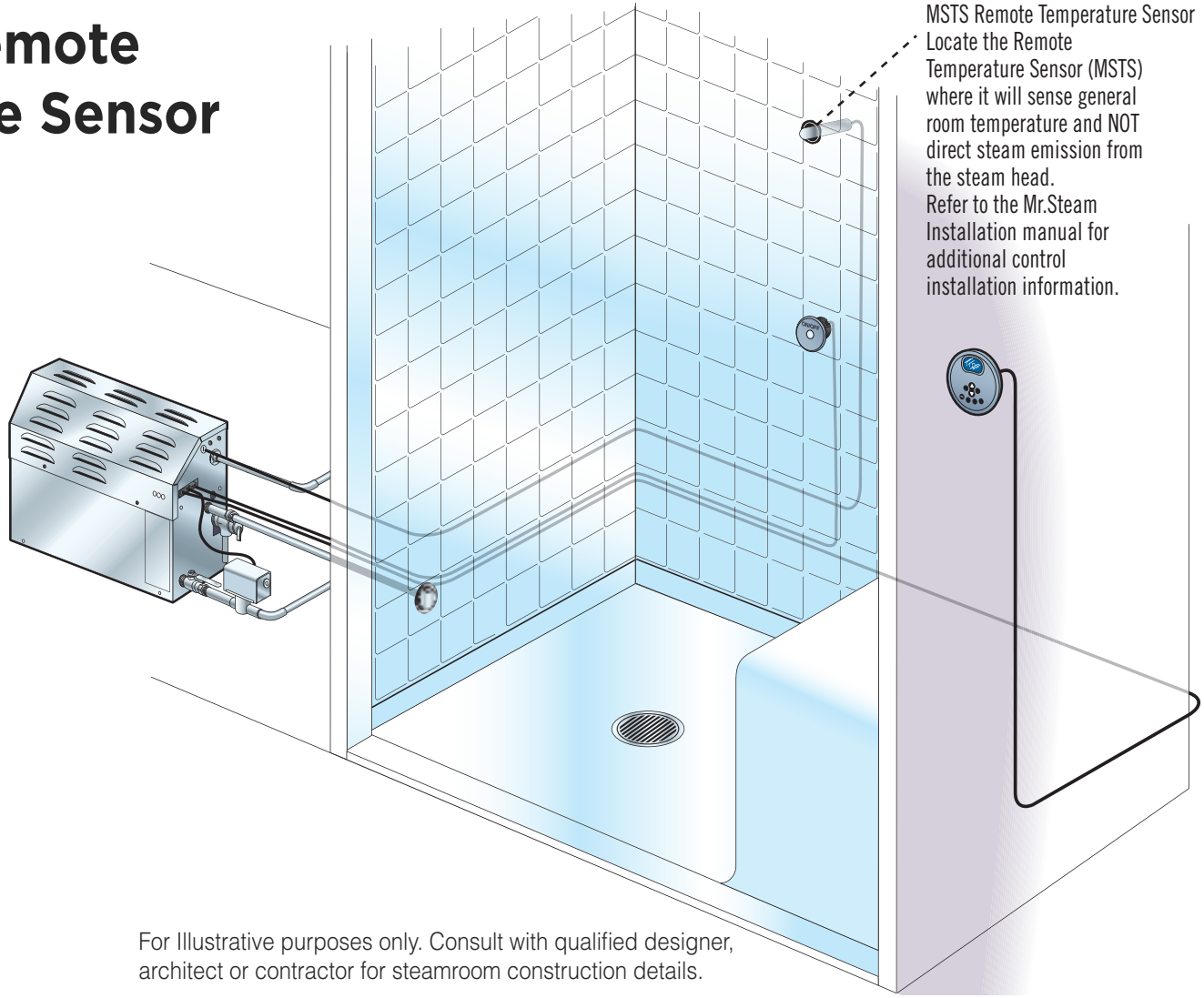

For Illustrative purposes only. Consult with qualified designer, architect or contractor for steamroom construction details.

Steam Genie® Control

- Activate your steam shower from anywhere in the home - Wirelessly
- Penetrates walls! Radio Frequency activated. Can be easily connected with any Mr.Steam® bath generator
- Adapts to standard Mr.Steam® generator. No upgrade required
- Easy Plug & Play connection
- Can be used inside the shower
- Removable lanyard for convenience & storage “wearability”

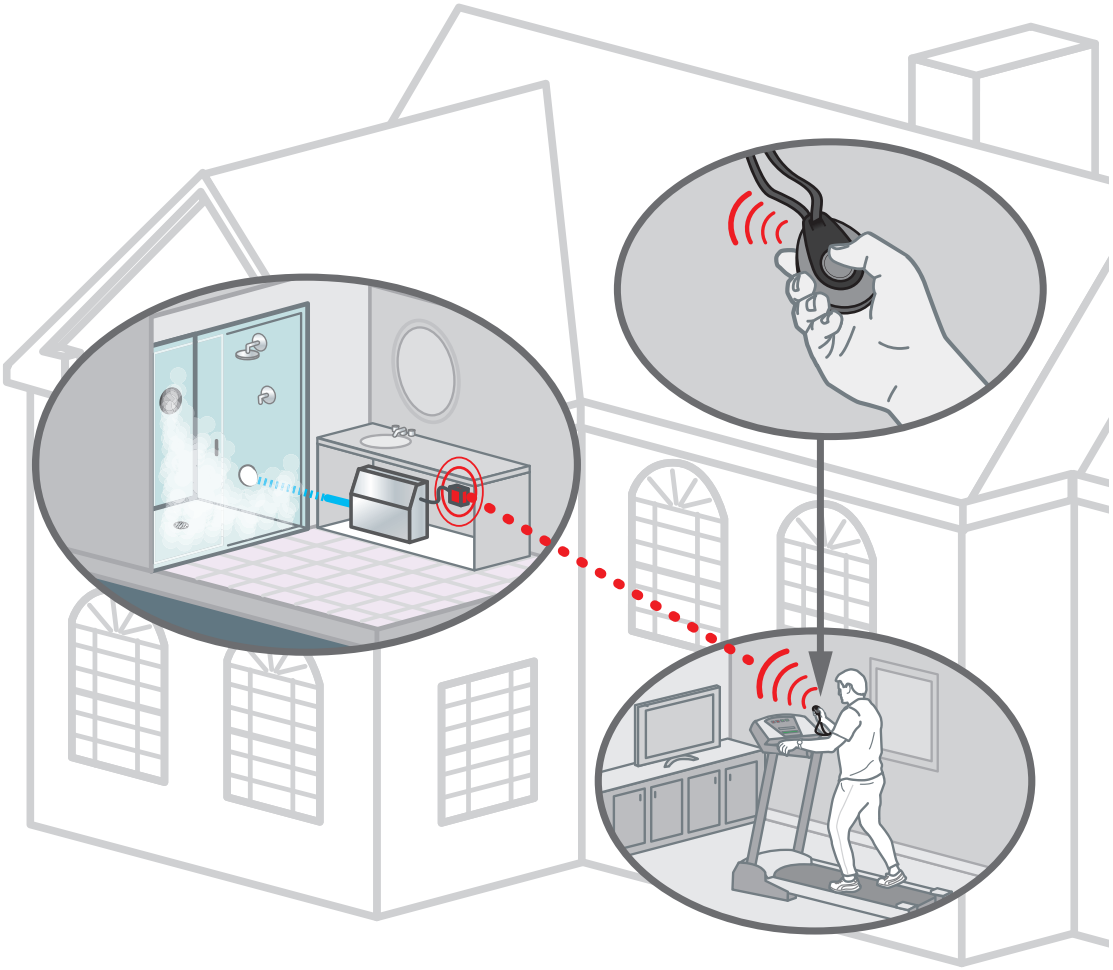

AromaSteam™ Steamhead and Optional Acrylic Shield Installation

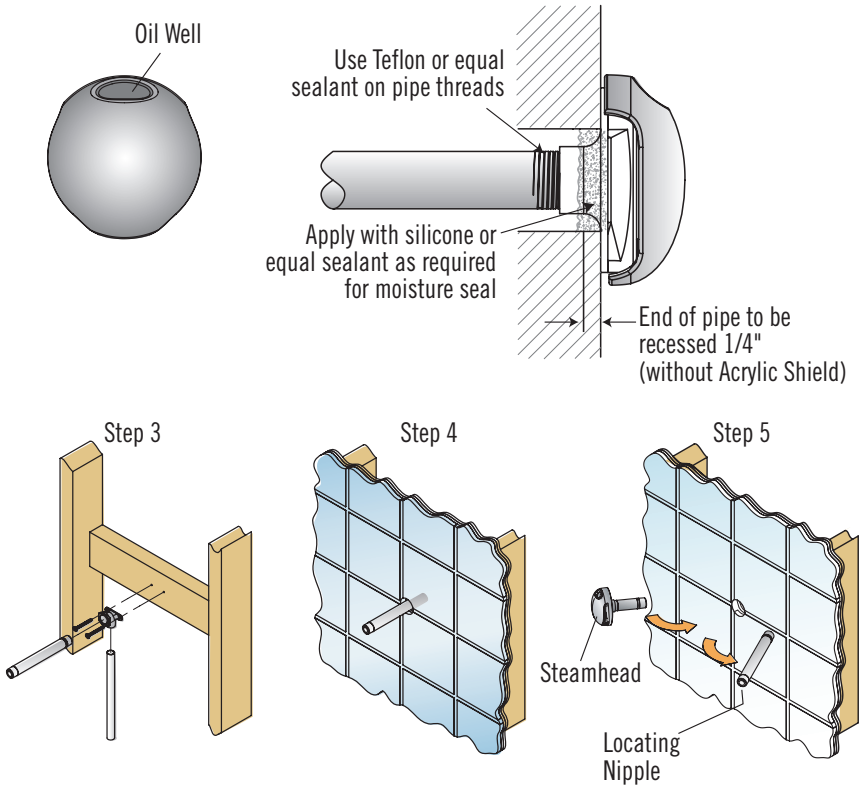

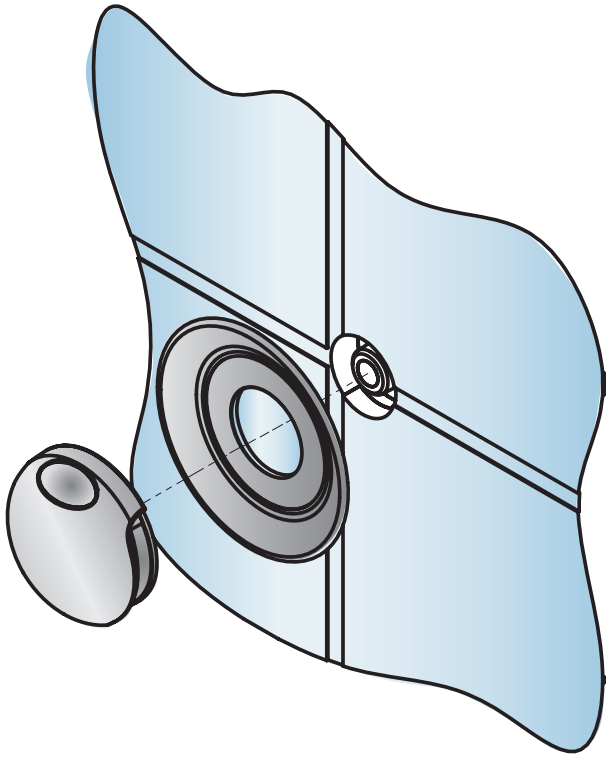

NOTE: Steamhead to be installed 6-12" above the floor.

A 1.5" diameter hole in the steamroom is required to mount the steamhead. Refer to the Mr.Steam Installation Manual for additional installation information.

The Acrylic Shield (PN 103938) is for use when acrylic or other non-heat resistant materials are used for the steamroom enclosure.

Using Essential Oils with the AromaSteam™ Steamhead

Enjoy essential oils by placing a drop or two, into your steamhead as shown in the illustration.

CAUTION: Use essential oils with caution. Essential oils are for external use only. Keep out of reach of children. Essential oils are highly concentrated and are potent substances and should not be applied directly to the skin as they can be irritants. Use essential oils with caution.

CAUTION: Place the drops into the Mr.Steam AromaSteam steamhead well prior to turning on the steambath. Do not place drops in a hot steam head as SERIOUS INJURY CAN RESULT IF YOU DO NOT FOLLOW THIS WARNING.

CAUTION: Start with one drop to gauge strength and suitability. Limit to a maximum of a few drops during a steambathing session.

CAUTION: Some people may find that the aroma makes them dizzy and the user should exit the steam bath IMMEDIATELY. If skin irritation occurs stop using the oils immediately. Remove any excess oil by washing in mild soap and water. If ingested, rinse mouth with water. Administer water or milk to dilute. Contact a physician immediately.

Tightly close containers when storing oils. Keep away from sources of ignition.

Mr.Steam Essential Oils made from natural plant extracts. Packaged as individual 10ml bottles with integral dropper.

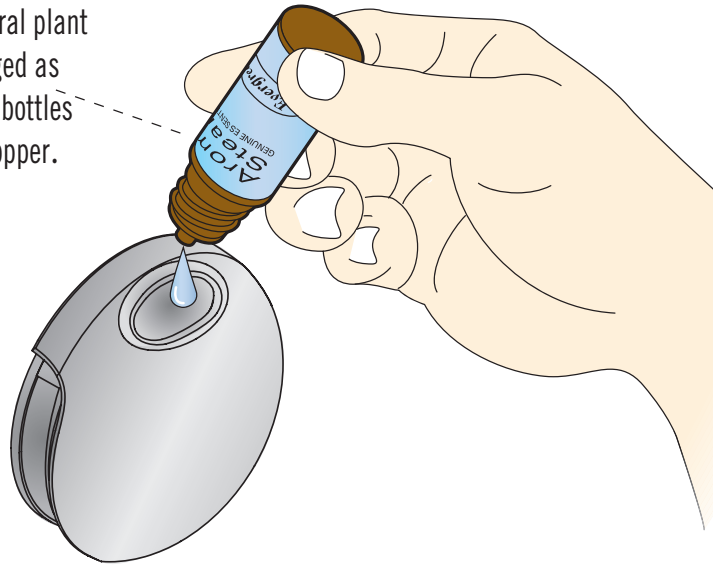

AromaSteam™ System
MS Aroma

Electronic Oil delivery system evenly infuses aroma into steam for an aromatherapy experience. Complete with in-shower control, oil container caddy, hoses, fittings and oil atomizer. AromaSteam Essential oils are available in one-liter bottles. Not for use with acrylic or fiberglass rooms.

Locate the AromaSteam system to monitor the consumption of essential oils and for easy oil replacement.

NOTE: CABLES SHOULD NOT CONTACT STEAM PIPE.

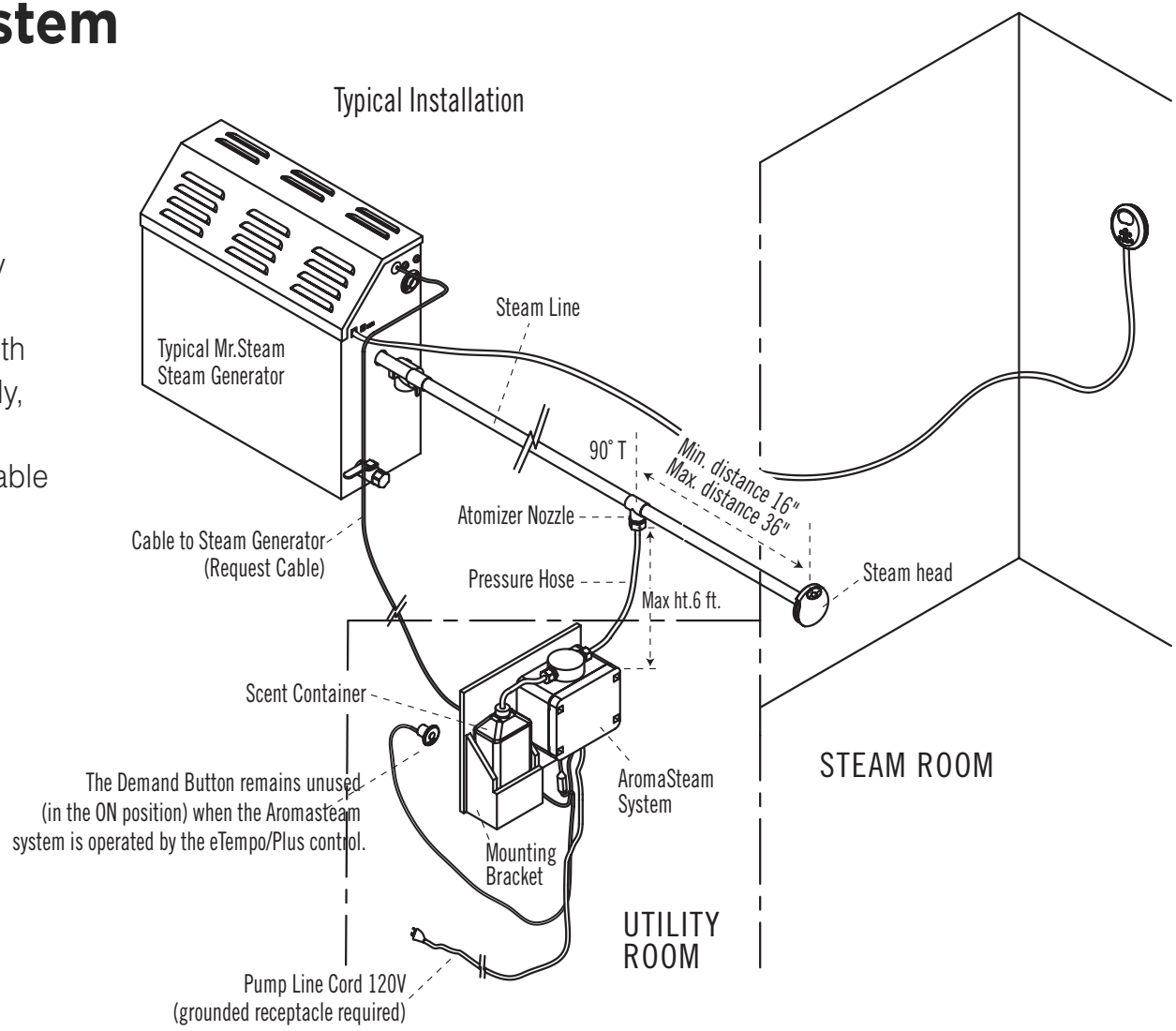

ChromaSteam™ System

LED light suffuses steam environment with multiple colors, from airy blue to sensual red. Ceiling mounted, vapor-sealed, low-voltage LED module for steam/shower enclosure of any size. The ChromaSteam system is complete with LED light and color election microprocessor. UL Listed.

NOTE: for mood lighting only. The ChromaSteam System is not a substitute for general illumination. Consultation with architect, designer and/or contractor on room design and construction is strongly recommended.

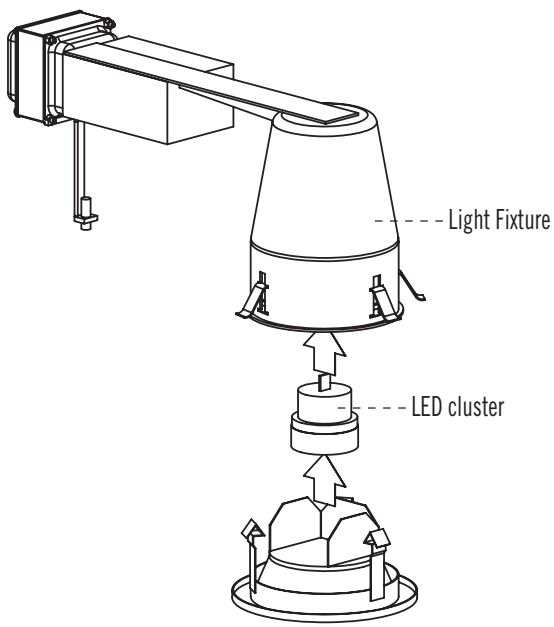

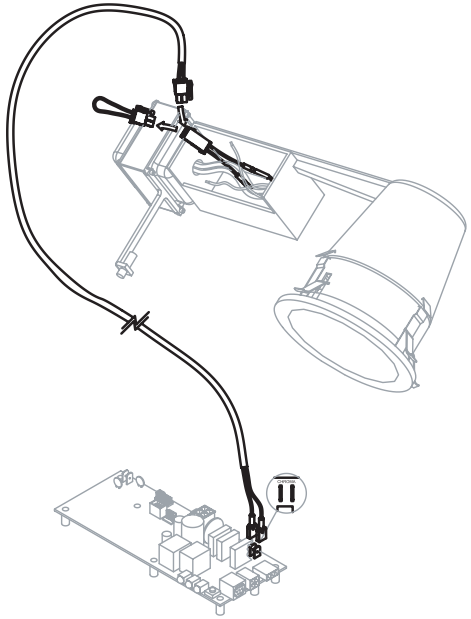

Figure 1

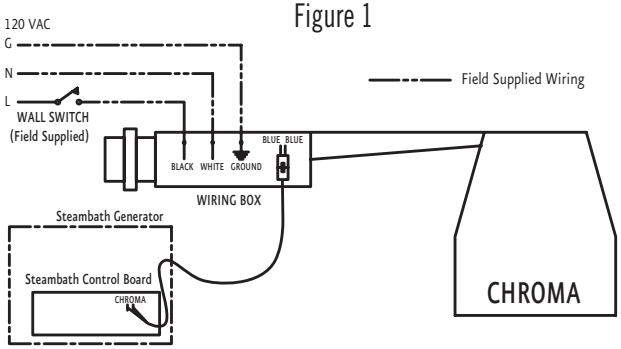

Figure 2

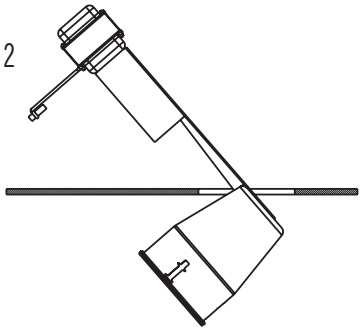

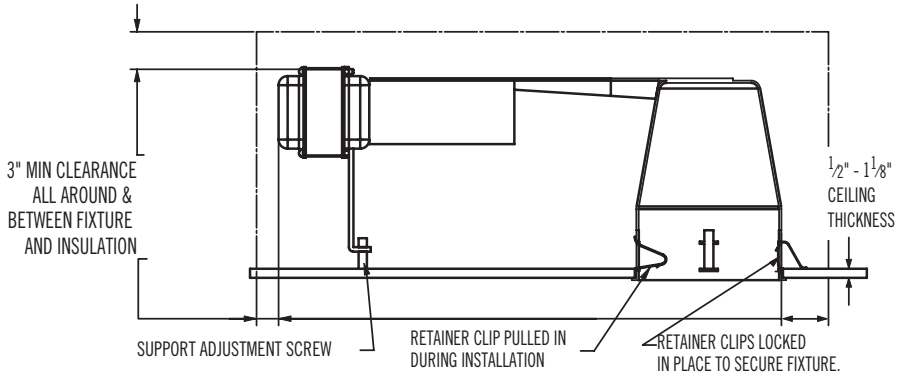

Speakers

MS-Speakers

Two 5½" diameter flush-mount two-way speakers for steam/shower use, polypropylene cones, ABS frames with grills. Suitable for almost any source of audio input. Rated 60W peak power 8 ohms impedance with 1" tweeter for full range sound.Use only CL2 or CL3 UL listed wires to connect speakers to audio source.

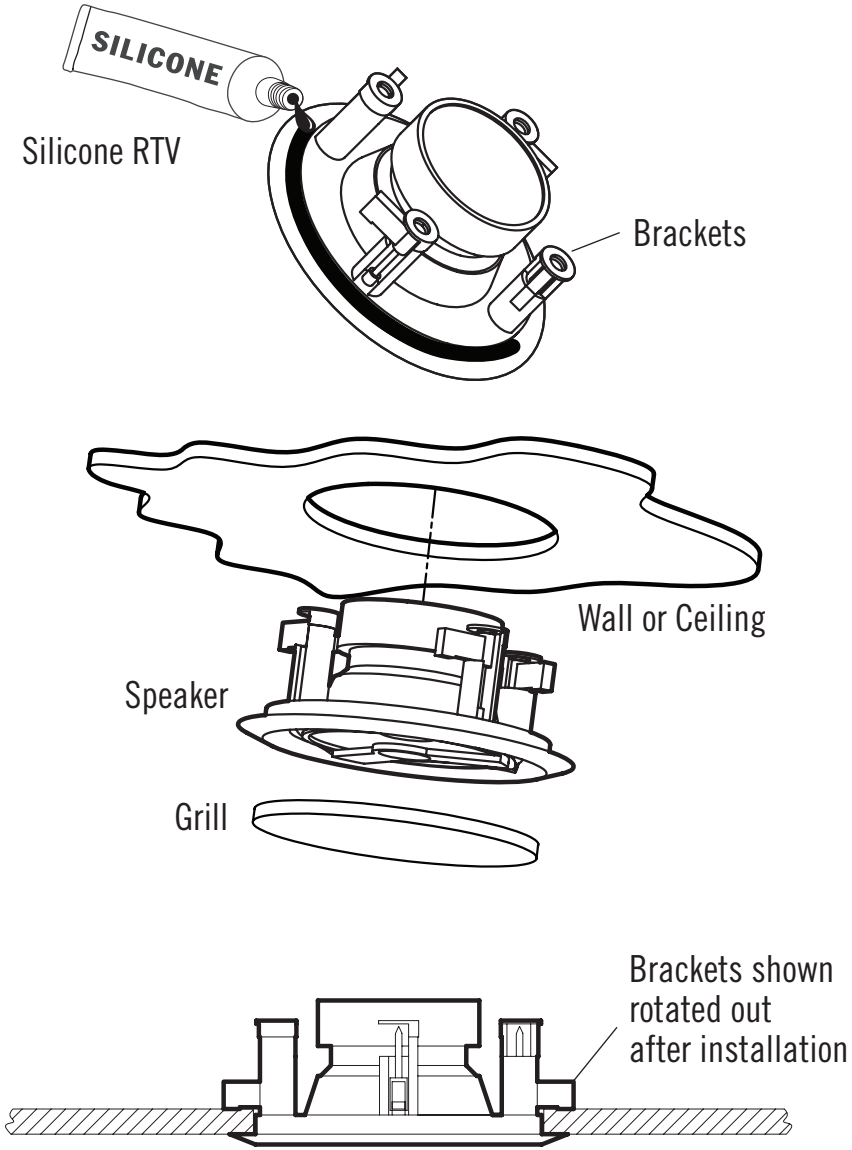

Shower Seat

MS-Seat

Teak wood, seat drops for use, folds for storage

Dimensions: 19¾"W x 13¼"D x 1¼"

Max 250 lbs. rated

Polished Chrome brackets

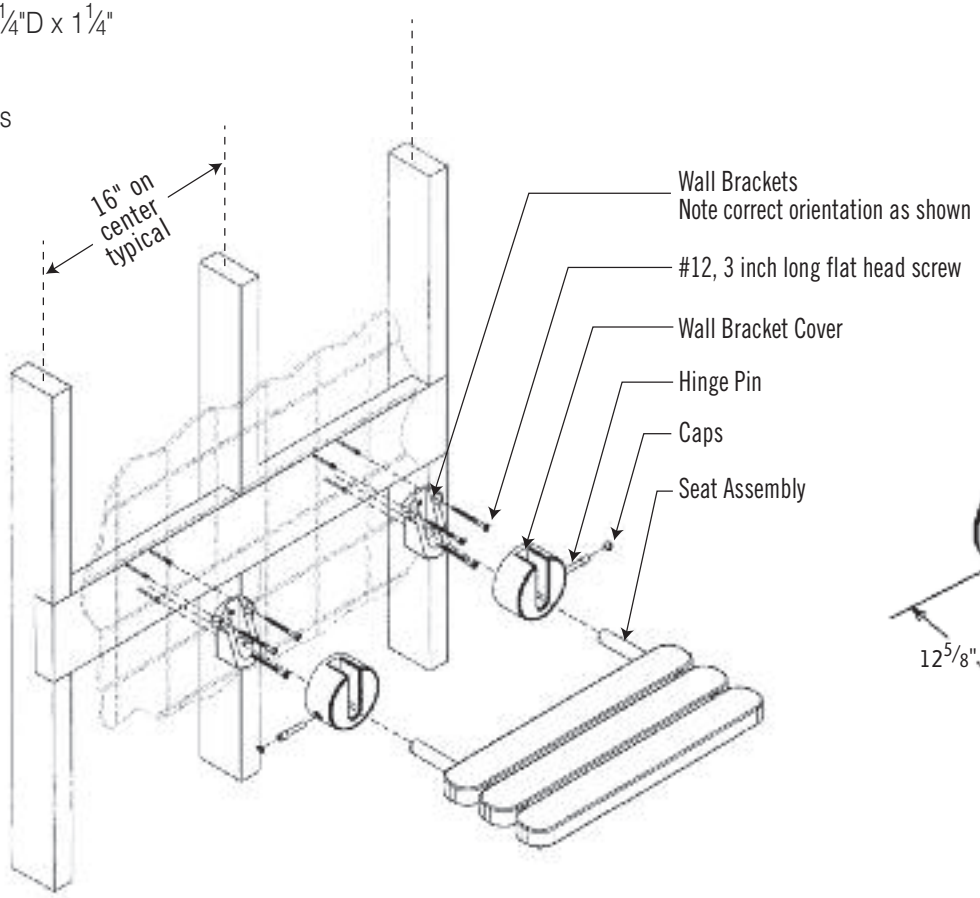

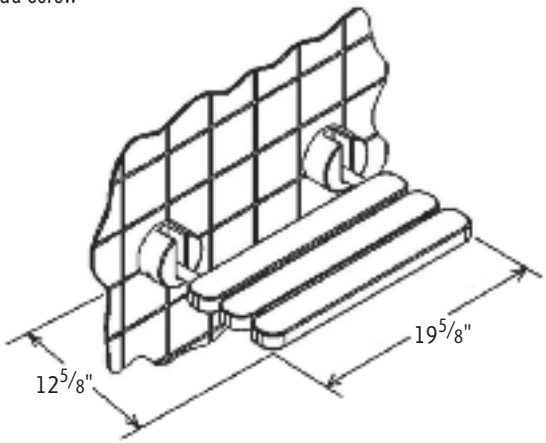

Completed Assembly
Shown in seating position

mr.steam®

Sussman-Automatic Corporation® hello@mrsteam.com www.mrsteam.com

43-20 34th Street, Long Island City, NY 11101 Tel: 718 937 4500 Fax: 718 472 3256

9410 S. La Cienega Blvd. Inglewood CA 90301 Tel: 310 216 6565 Fax: 310 216 2944

Fan us on Facebook

Follow us on Twitter

LinkedIn

YouTube

2012 © Sussman-Automatic Corporation

MR. STEAM and des., A LIFETIME OF PLEASURE, AROMAFLO, AUTOFLUSH, CLEAN STEAM...EVERY TIME, CLUB THERAPY, DIGITAL 1, eTEMPO, eTEMPO/PLUS, FROM BATHROOM TO SPA, MAKING WELLNESS a WAY of LIFE, MUSIC THERAPY, STEAM ON DEMAND, STEAM@HOME, STEAM GENIE, STEAMTHERAPY, and SUSSMAN are registered trademarks of Sussman-Automatic Corporation. AROMASTEAM, BUTLER PACKAGE, CHROMASTEAM, EXPRESS STEAM, HOME WIZARD, STEAM STOP, THE INTELLIGENT STEAMBATH and VALET PACKAGE are trademarks of Sussman-Automatic Corporation.

PUR 100431 5/12

mr.steam®