B-2347
Faucet with Sidespray

EasyInstall

B-2347
EasyInstall Concealed Widespread (CWS) Faucet with 4' Sidespray, 4" Wrist Action Handles, Compression Cartridges, 8" Inlet Centers and Swivel Gooseneck with Deck Flange and Rosespray Outlet

B-2347



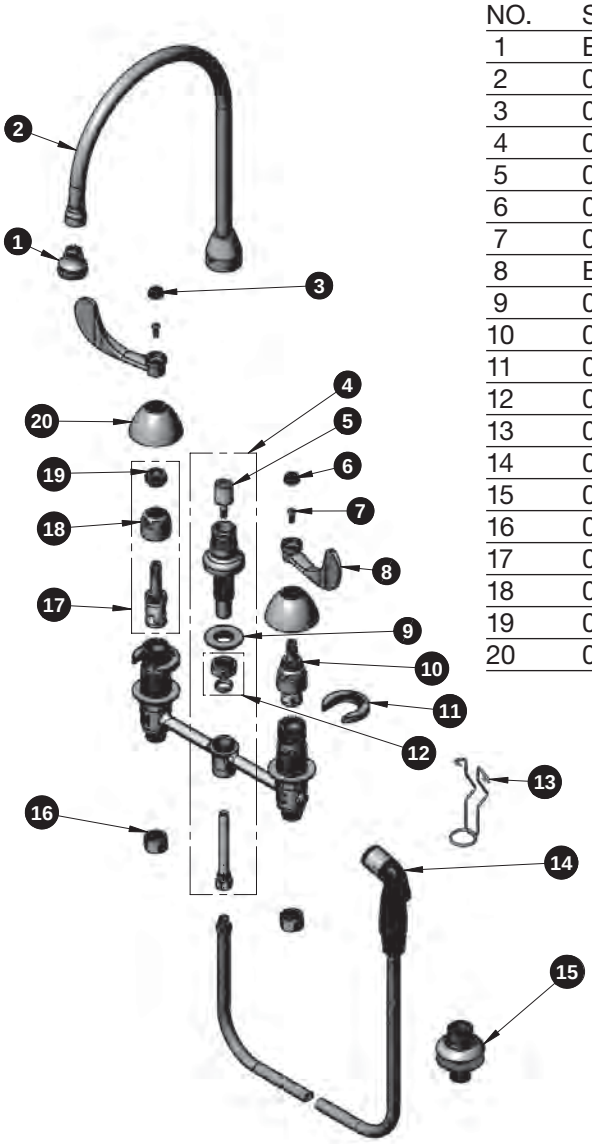

ITEM NO.	SALES NO.	DESCRIPTION
1	B-0103	Rosespray Outlet
2	009436-40	Assembly, B-2347 Nozzle
3	001194-45	Red HW Index
4	017208-40	Center Body Diverter Asm.
5	002338-45	Diverter
6	001686-45	Blue CW Index
7	000925-45	Lab Handle Screw
8	B-WH4	4" Wrist Action Handle
9	016742-45	Center Flange Nut
10	016752-40	CWS Bonnet & LTC Eterna Cartridge
11	016749-45	C-Washer
12	016745-45	Compression Nut & Fitting
13	016777-45	Concealed Widespread Hanger
14	001495-45	Side Spray
15	001496-45	Hose Guide
16	000958-20	Coupling Nut
17	016753-40	CWS Bonnet & RTC Eterna Cartridge
18	016743-25	CWS Bonnet Assembly
19	009002-25	Packing Assembly
20	001257-40	Bell Escutcheon



Installation Repair Kit
017245-40
Includes #9, (2) #11 and #13

RELIABILITY BUILT IN™

2 Saddleback Cove • P.O. Box 1088 • Travelers Rest, SC 29690
800-476-4103 • **www.tsbrass.com**