B-3200
Pressure Balance Shower Valve

B-3200
Pressure Balance Shower Valve (ASSE 1016) with Adjustable Temperature Limit Stop, Cover Plate Assembly and 1/2" Sweat Connections, 2.5 GPM Shower Head with Shower Arm and Escutcheon and Tub Spout with Diverter

B-3200



ITEM NO.	SALES NO.	DESCRIPTION
1	017442-45	Shower Head w/ Arm & Escutcheon
2	B-3204	Pressure Balance Shower Valve
3	017444-45	PBV Cover Plate Assembly
4	017441-45	PBV Cartridge Assembly
5	017443-45	Handle w/ Set Screw & Temp. Index
6	017439-45	Tub Spout w/ Diverter

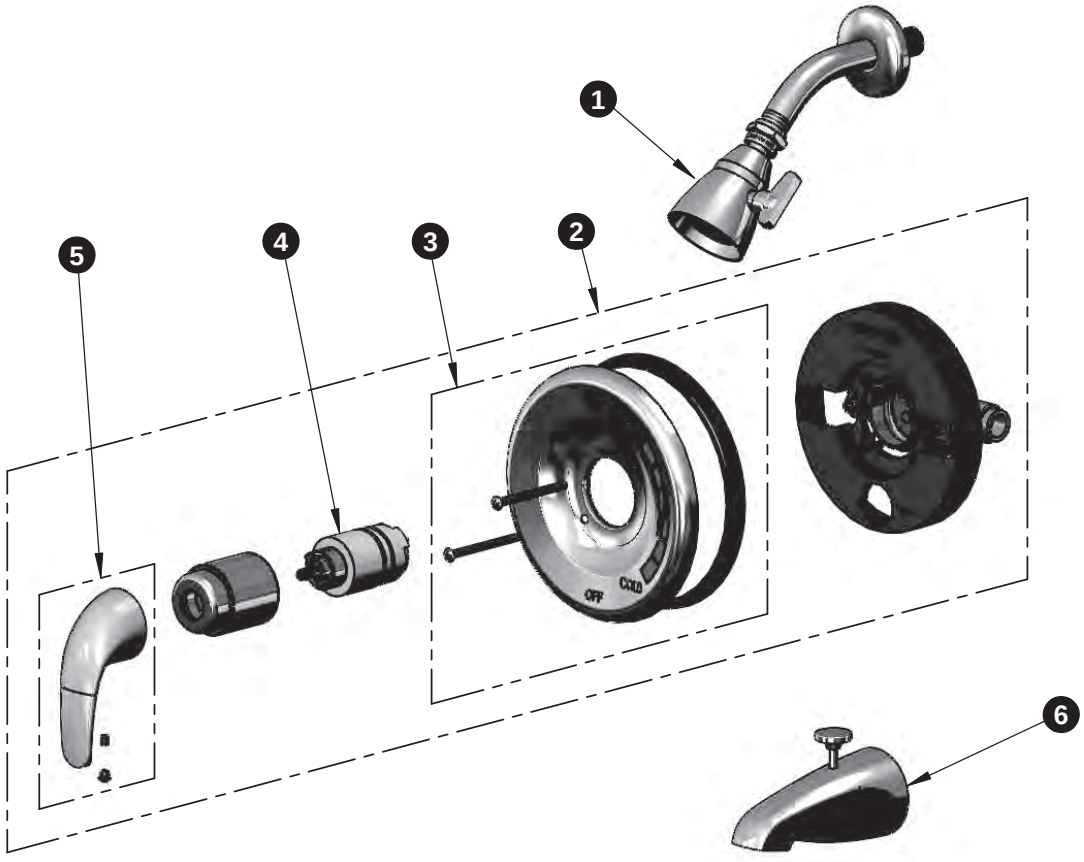

RELIABILITY BUILT IN™

2 Saddleback Cove • P.O. Box 1088 • Travelers Rest, SC 29690
800-476-4103 • **www.tsbrass.com**