B-3940 and B-3940-01
Twist Handle Waste Valves

B-3940
Waste Valve with Twist Handle, 3" Sink Opening, 2" NPT Male Outlet and 1-1/2" NPT Male Adapter

B-3940-01
Same as B-3940 except includes Overflow Tube with Head Assembly

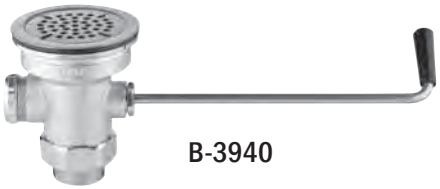

B-3940

ITEM NO.	SALES NO.	DESCRIPTION
1	010389-45	O-Ring, Plunger
2	010390-45	Ferrule, Coupling Nut
3	010391-45	Nut, Coupling For Twist Drain
4	010381-45	Gasket, 3" Face Flange
5	015306-45	Flange, 3" Face
6	010385-45	Strainer, 3" Snap-in
7	010388-45	Plunger, Twist Drain
8	010393-45	Handle Asm., Waste Valve, Twist
9	B-3945	Adapter, 2" NPT x 1-1/2" NPT
10	011355-45	Tube, Overflow Elbow (B-3940-01)
11	011356-45	Head Assembly, Overflow Tube (B-3940-01)

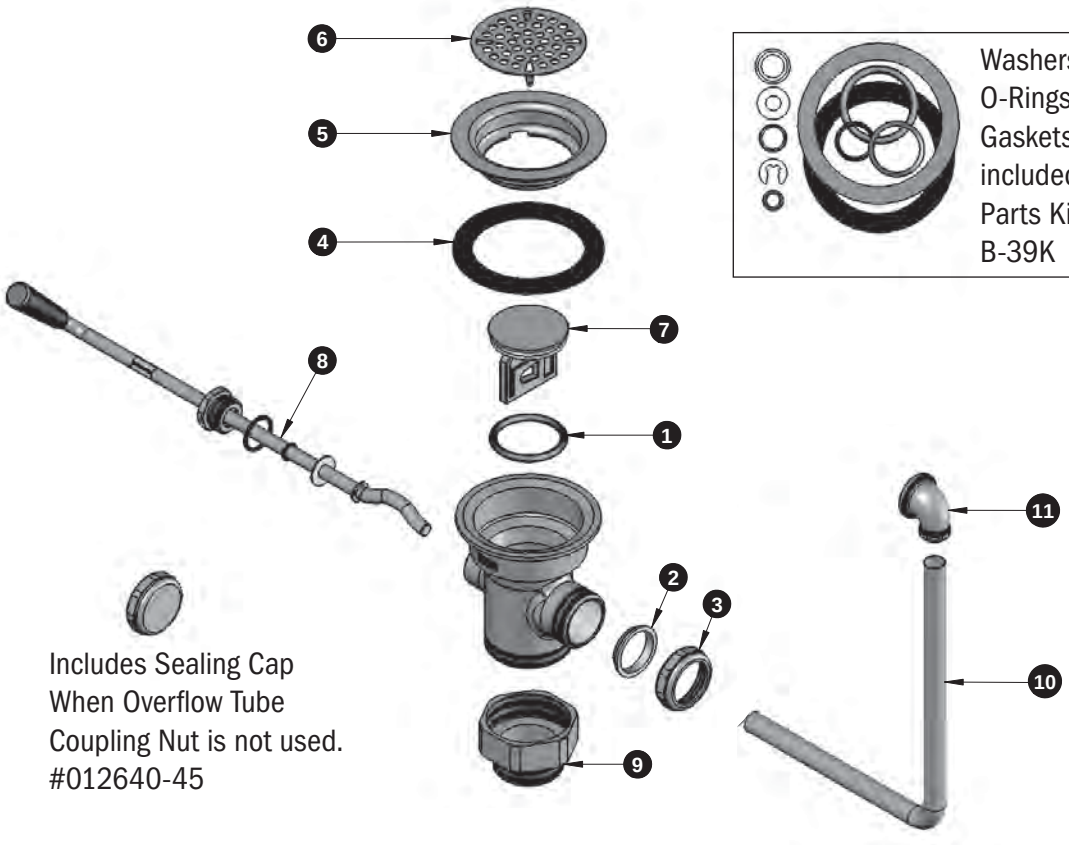

Washers, O-Rings and Gaskets included in Parts Kit B-39K

Includes Sealing Cap When Overflow Tube Coupling Nut is not used. #012640-45