B-3950 and B-3950-01
Twist Handle Waste Valves

B-3950
Waste Valve with Twist Handle, 3-1/2" Sink Opening, 2" NPT Male Outlet and 1-1/2" NPT Male Adapter

B-3950-01
Same as B-3950 except includes Overflow Tube with Head Assembly

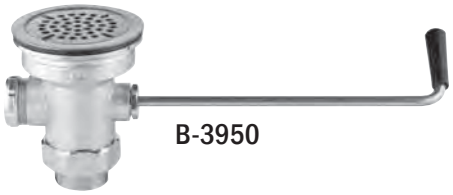
B-3950

ITEM NO.	SALES NO.	DESCRIPTION
1	010389-45	O-Ring, Plunger
2	010390-45	Ferrule, Coupling Nut
3	010391-45	Nut, Coupling For Twist Drain
4	010382-45	Gasket, 3-1/2" Face Flange
5	015384-45	Flange, 3-1/2" Face
6	010386-45	Strainer, 3-1/2" Snap-in
7	010388-45	Plunger, Twist Drain
8	010393-45	Handle Asm., Waste Valve, Twist
9	011355-45	Tube, Overflow Elbow (B-3950-01)
10	011356-45	Head Asm., Overflow Tube (B-3950-01)
11	B-3945	Adapter, 2" NPT x 1-1/2" NPT

Washers, O-Rings and Gaskets included in Parts Kit B-39K



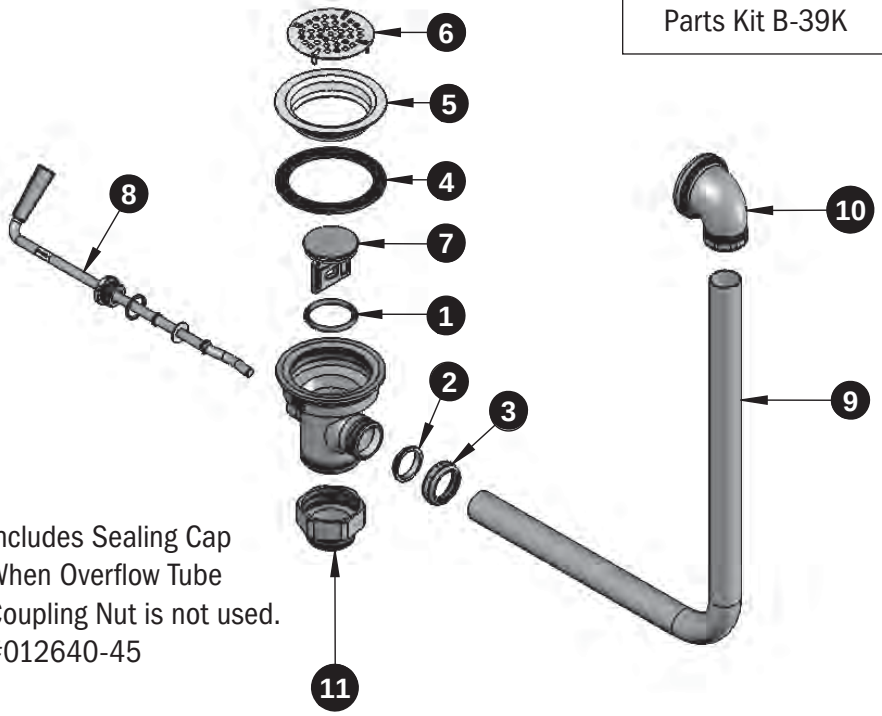

Includes Sealing Cap When Overflow Tube Coupling Nut is not used. #012640-45