B-3990 and B-3992
Modular Waste Valves

B-3990 (shown below)
Modular Waste Valve with Pull Handle, 3-1/2" Sink Opening, 2" NPT Female x 1-1/2" NPT Male Adapter

B-3992 (shown, right)
Same as B-3990 except 2" NPT Male x 1-1/2" NPT Female Outlet

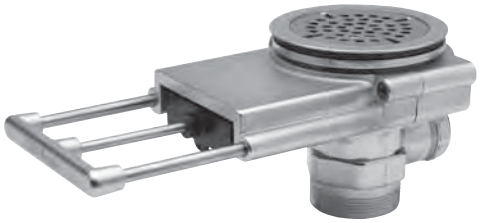

B-3992
(shown open)

Available Handle Extension Kits:
B-3990-3KIT (3" Extension)
B-3990-5KIT (5" Extension)

ITEM NO.	SALES NO.	DESCRIPTION
1	010386-45	Strainer, 3 1/2" Snap-in Removable
2	016654-45	Truss Head Drilled Spanner 8-32 x 1/4", 18-8 SS
3	010384-45	Flange, 3 1/2" Face
4	017694-45	Guard, 3 1/2" Vandal Resistant Drain
5	010382-45	Gasket, 3 1/2" Face Flange
6	017219-45	Valve Body Assembly w/ (2) Seals
7	017698-45K	Valve Body Seal Kit, Bag of (2)
8	017669-45	10-32 x 1-1/8 SHCS, SS
9	B-3945	Adapter, 2" NPT x 1 1/2" NPT (B-3990)
10	010391-45	Nut, Coupling For Twist Drain
11	010390-45	Ferrule, Coupling Nut
12	017454-45	1/4-20 x 1-1/4 SHCS, SS
13	017451-20	Support Rod
14	017448-45	Handle
15	017670-45	Waste Drain Installation Tool

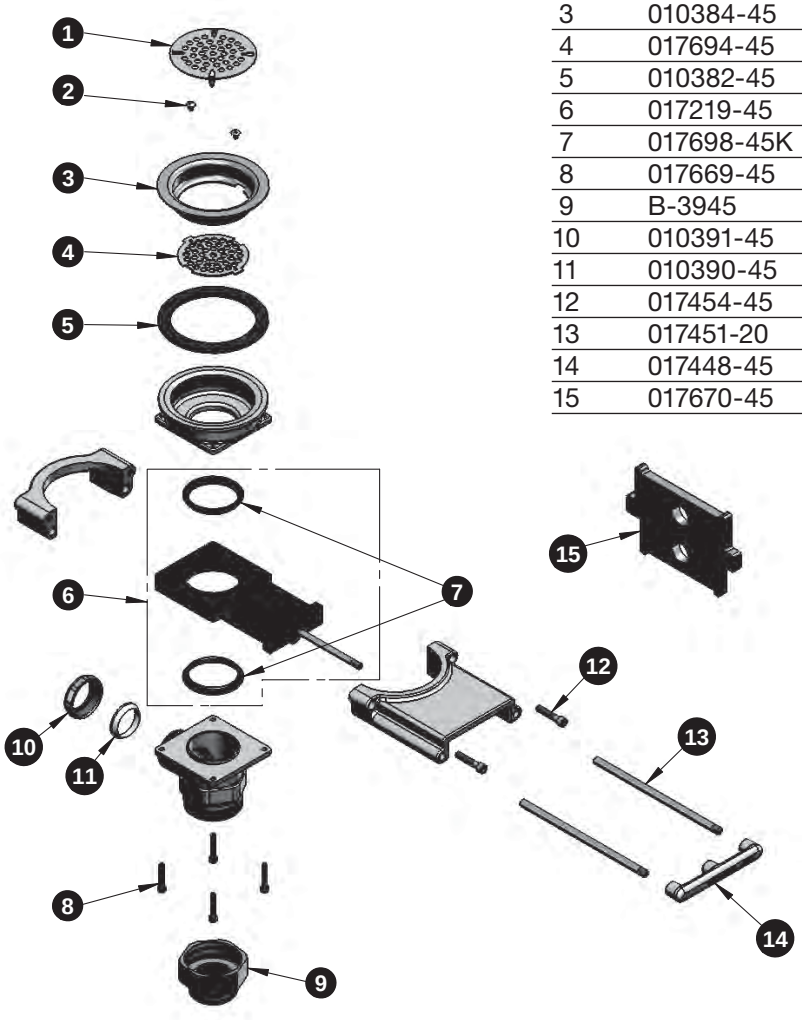



#014734-45
#8 Spanner Bit for Vandal-Resistant Screw (included)



#012640-45
Sealing Cap when Overflow Tube Coupling Nut is not used (included)