BL-5707-01

Single Temperature Lab Faucet, Vandal-Resistant

BL-5707-01
Vandal-Resistant Single Temperature Lab Faucet with Rigid Vacuum Breaker Nozzle, Serrated Tip Outlet, Four-Arm Handle and 1/2" NPSM Male Shank Inlet

BL-5707-01



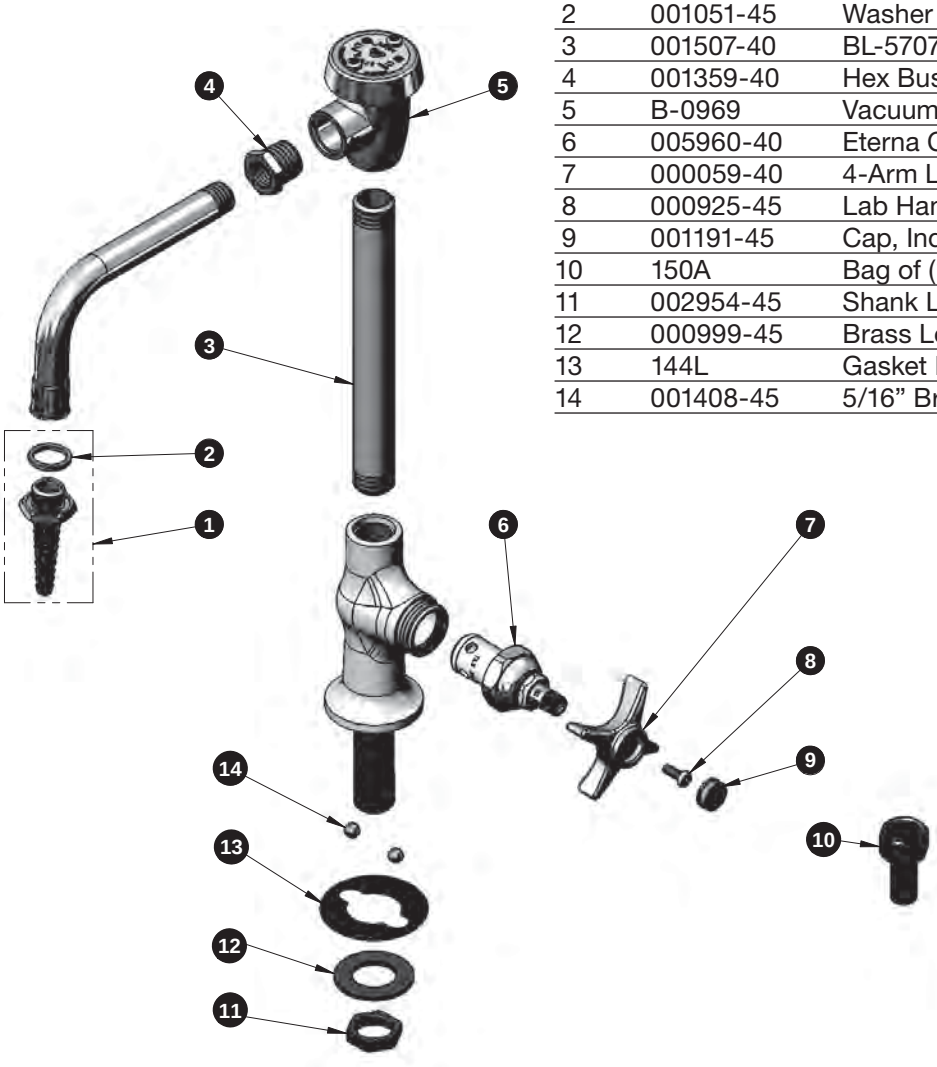

ITEM NO.	SALES NO.	DESCRIPTION
1	B-0198	Serrated Tip
2	001051-45	Washer
3	001507-40	BL-5707 Riser
4	001359-40	Hex Bushing, 1/2" Male x 3/8" Female
5	B-0969	Vacuum Breaker, 1/2"
6	005960-40	Eterna Cartridge - RTC
7	000059-40	4-Arm Lab Handle
8	000925-45	Lab Handle Screw
9	001191-45	Cap, Index, Green, Cold Water
10	150A	Bag of (1) Nut & (1) Tailpiece
11	002954-45	Shank Lock Nut
12	000999-45	Brass Lock Washer
13	144L	Gasket Polypropylene
14	001408-45	5/16" Brass Ball (1)