B-0113 and B-0113-B
Pre-Rinse Units

B-0113
EasyInstall Pre-Rinse Unit
Single Deck Mount Base Faucet with Flexible Supply Hoses, 24" Riser, Overhead Spring, 44" Flex Hose and B-0107 Spray Valve

B-0113-B (shown right)
Includes Wall Bracket (B-0109-01)

EasyInstall

B-0113-B



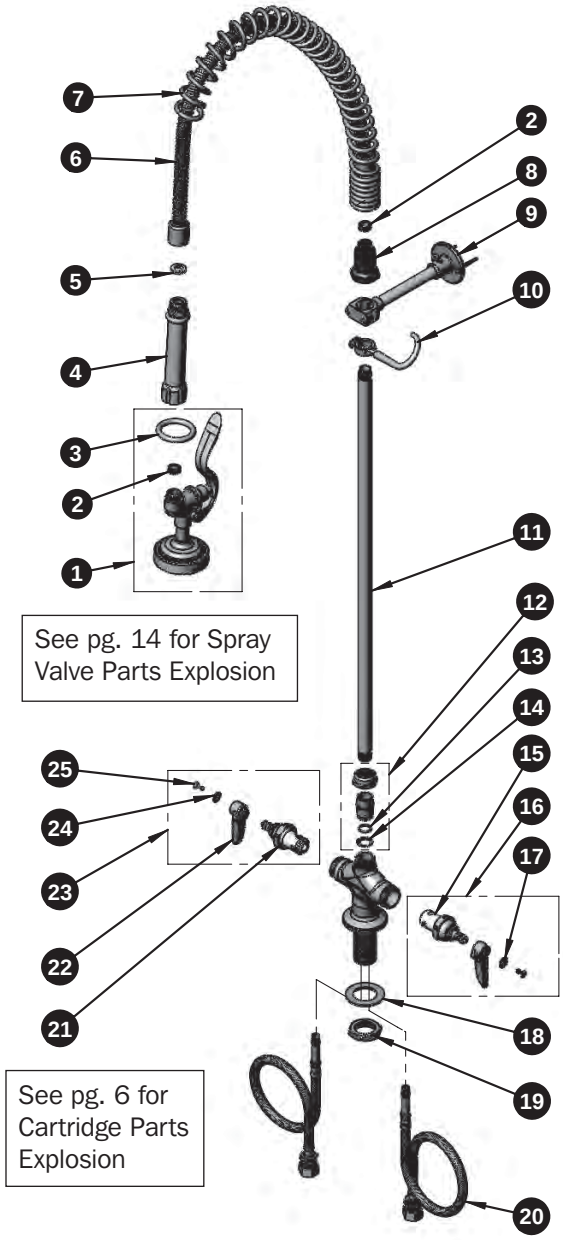

See pg. 14 for Spray Valve Parts Explosion

See pg. 6 for Cartridge Parts Explosion

ITEM NO.	SALES NO.	DESCRIPTION
1	B-0107	Spray Valve Asm
2	010476-45	#27 Washer
3	000907-45	Spray Valve Hold Down Ring
4	002987-40	Grip Handle Assembly
5	001014-45	Washer, B-0100 Hose Barrel
6	B-0044-H2A	44" Flex Hose Assembly Less Handle
7	000888-45	EasyInstall Overhead Spring
8	000821-40	Spring Body
9	B-0109-01	6" Wall Bracket Asy (B-0113-B)
10	004R	Finger Hook Assembly
11	000372-40	3/8" NPT x 24" Long Riser
12	EZ-K	EasyInstall Kit: Bushing, O-Ring, Lock Washer & Loctite 222
13	001065-45	O-Ring
14	014200-45	Star Washer, Anti-Rotation
15	012442-40	Cold Eterna Spindle Assembly w/Spring Check
16	002711-40	Cold Eterna Spindle Assembly w/ Spring Check, Handle, Index & Screw
17	001660-45	Blue Index-CW
18	002290-45	Lock Washer
19	000965-45	Lock Nut
20	012534-45	Flexible Connector Hose (2)
21	012443-40	Hot Eterna Spindle Assembly w/ Spring Check
22	001638-45	Lever Handle
23	002712-40	Hot Eterna Spindle Assembly w/ Spring Check, Handle, Index & Screw
24	001661-45	Red Index-HW
25	000922-45	Lever Handle Screw

2 Saddleback Cove • P.O. Box 1088 • Travelers Rest, SC 29690
800-476-4103 • **www.tsbrass.com**