B-0200-LN and B-0201
Pantry Faucets

B-0200-LN
Single Hole Double Pantry Faucet Less Nozzle with Eterna Cartridges, Spreader with 1/2" NPT Male Inlets and Lever Handles

B-0201
Same as B-0200-LN except includes 12" Swing Nozzle with B-PT Stream Regulator Outlet

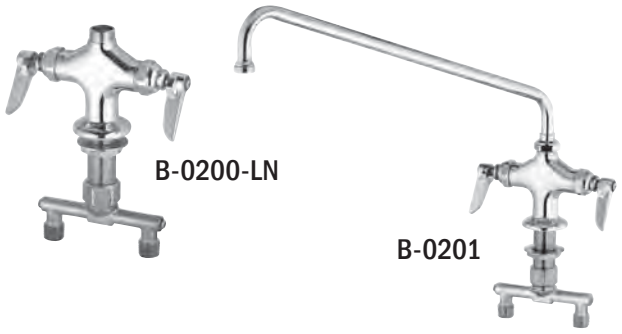

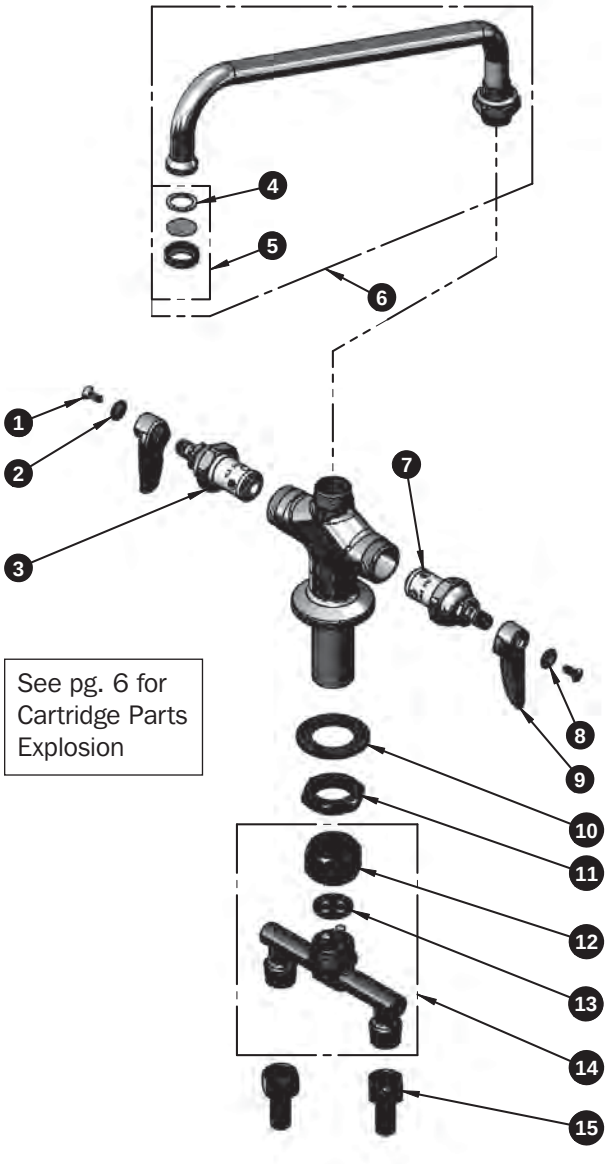

See pg. 6 for Cartridge Parts Explosion

ITEM NO.	SALES NO.	DESCRIPTION
1	000922-45	Lever Handle Screw
2	001661-45	Red Index-HW
3	005960-40	Spindle Asm, Eterna "Hot"
4	001048-45	Nozzle Tip Washer (B-0201)
5	B-PT	Stream Regulator Asm (B-0201)
6	062X	12" Swing Nozzle Asm (B-0201)
7	005959-40	Spindle Asm. Eterna "Cold"
8	001660-45	Blue Index-CW
9	001638-45	Lever Handle
10	002290-45	Lock Washer
11	000965-45	Lock Nut
12	000736-20	Spreader Coupler Nut
13	001041-45	Spreader Washer
14	002898-40	4" Spreader Unit
15	150A	Bag of (1) Nut & (1) Tailpiece