B-0208
Single Temperature Faucet

B-0208
Single Temperature Deck Mount Faucet with Eterna Cartridge, 1/2" NPSM Male Shank, Lever Handle and 6" Cast Spout with 2.2 GPM Aerator



B-0208

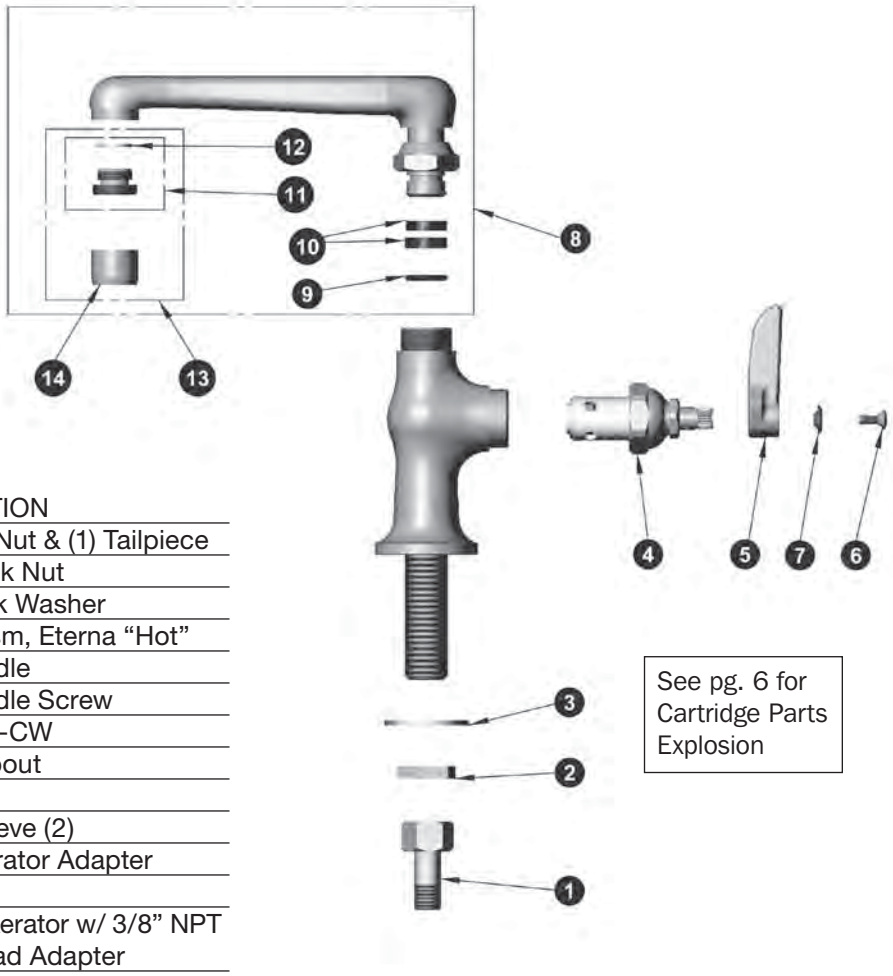

ITEM NO.	SALES NO.	DESCRIPTION
1	150A	Bag of (1) Nut & (1) Tailpiece
2	002954-45	Shank Lock Nut
3	000999-45	Brass Lock Washer
4	005960-40	Spindle Asm, Eterna "Hot"
5	001638-45	Lever Handle
6	000922-45	Lever Handle Screw
7	001660-45	Blue Index-CW
8	0CS6	6" Cast Spout
9	001074-45	O-Ring
10	011429-45	Swivel Sleeve (2)
11	044A	3/8" to Aerator Adapter
12	001043-45	Washer
13	B-0199-02	2.2 GPM Aerator w/ 3/8" NPT Male Thread Adapter
14	B-0199-01	2.2 GPM Aerator, Female

See pg. 6 for Cartridge Parts Explosion