B-0225 and B-0225-LN
Deck Mixing Faucets

B-0225
Double Pantry Faucet, 4" C/C with Eterna Cartridges, 12" Swing Nozzle with B-PT Stream Regulator Outlet, Lever Handles and 1/2" NPT 00AA Female Inlets

B-0225-LN
Same as B-0225 except less Swing Nozzle



B-0225



B-0225-LN

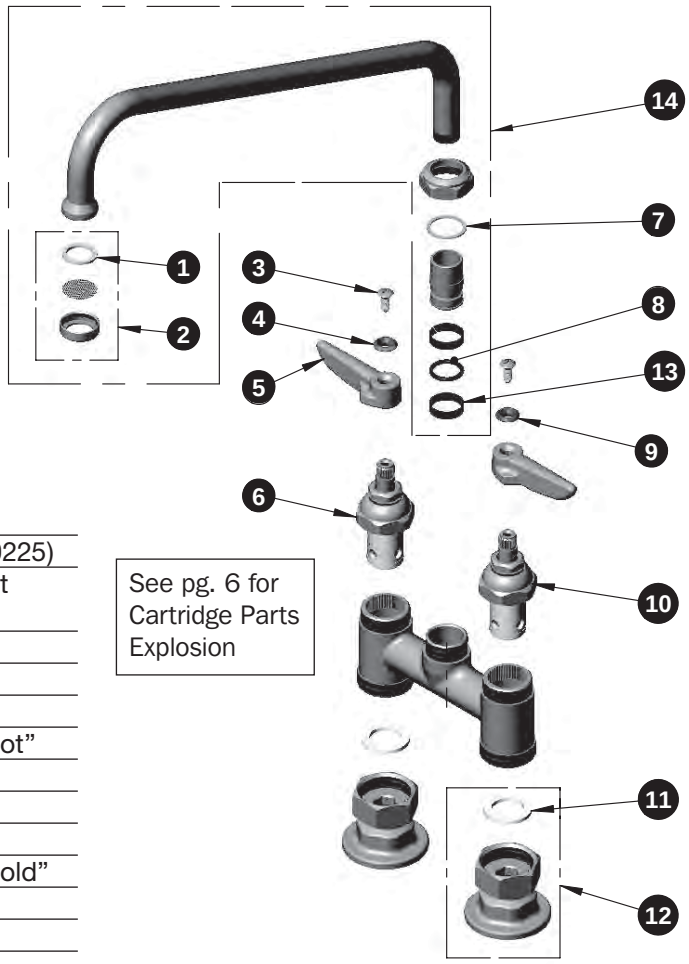

ITEM NO.	SALES NO.	DESCRIPTION
1	001048-45	Nozzle Tip Washer (B-0225)
2	B-PT	Stream Regulator Outlet (B-0225)
3	000922-45	Lever Handle Screw
4	001661-45	Red Index-HW
5	001638-45	Lever Handle
6	005960-40	Spindle Asm, Eterna "Hot"
7	009538-45	Swivel Washer
8	001074-45	O-Ring
9	001660-45	Blue Index-CW
10	005959-40	Spindle Asm. Eterna "Cold"
11	001019-45	Coupling Nut Washer
12	00AA	Flange Assembly
13	011429-45	Swivel Sleeves (2)
14	062X	12" Swing Nozzle (B-0225)

See pg. 6 for Cartridge Parts Explosion

RELIABILITY BUILT IN™

2 Saddleback Cove • P.O. Box 1088 • Travelers Rest, SC 29690
800-476-4103 • **www.tsbrass.com**