# B-0300 and B-0301
## Single Hole Mixing Faucets

**B-0300**
Single Hole Deck-Mount Mixing Faucet with Under-counter Spreader Assembly, Eterna Cartridges, Lever Handles, Rigid Gooseneck with Stream Regulator

**B-0301**
Same as B-0300 except with 133X Swivel Gooseneck with B-PT Stream Regulator Outlet

B-0300



B-0301

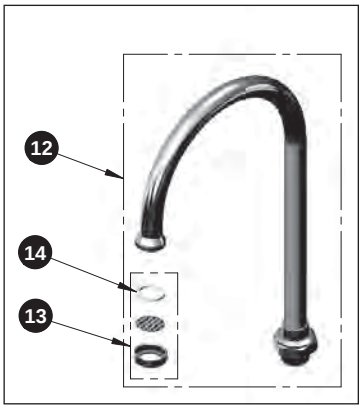


B-0300

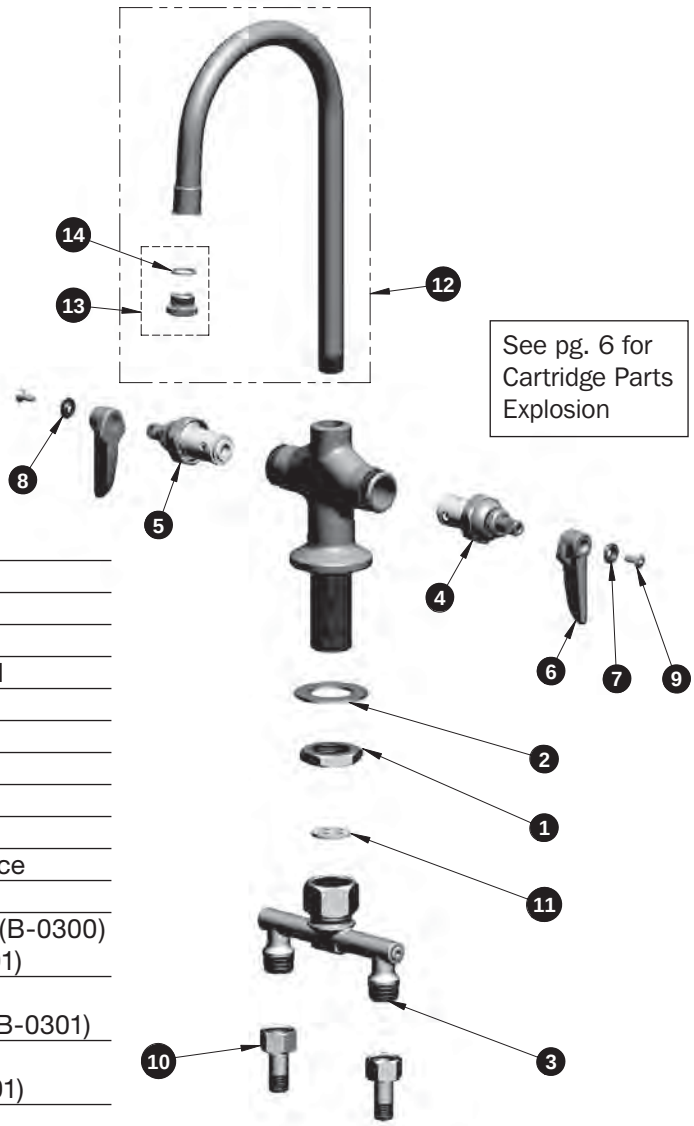


See pg. 6 for Cartridge Parts Explosion

| ITEM NO. | SALES NO. | DESCRIPTION |
|---|---|---|
| 1 | 000965-45 | Lock Nut |
| 2 | 002290-45 | Lock Washer |
| 3 | 002898-40 | Spreader Assembly |
| 4 | 005959-40 | Eterna Spindle Asm., Cold |
| 5 | 005960-40 | Eterna Spindle Asm., Hot |
| 6 | 001638-45 | Lever Handle |
| 7 | 001660-45 | Blue Index-CW |
| 8 | 001661-45 | Red Index-HW |
| 9 | 000922-45 | Lever Handle Screw |
| 10 | 150A | Bag of (1) Nut & (1) Tailpiece |
| 11 | 009634-45 | Spreader Washer |
| 12 | 120X | Rigid Gooseneck w/B-LT (B-0300) |
| | 133X | Swivel Gooseneck (B-0301) |
| 13 | B-LT | Tip, Lab Faucet (B-0300) |
| | B-PT | Stream Regulator Outlet (B-0301) |
| 14 | 001043-45 | Washer (B-0300) |
| | 001048-45 | Nozzle Tip Washer (B-0301) |