B-0330
Rigid Faucet

B-0330
Wall-Mount Mixing Faucet with Eterna Cartridges, Lever Handle, Rigid Gooseneck with B-LT Stream Regulator Outlet and 00AA Inlets


B-0330

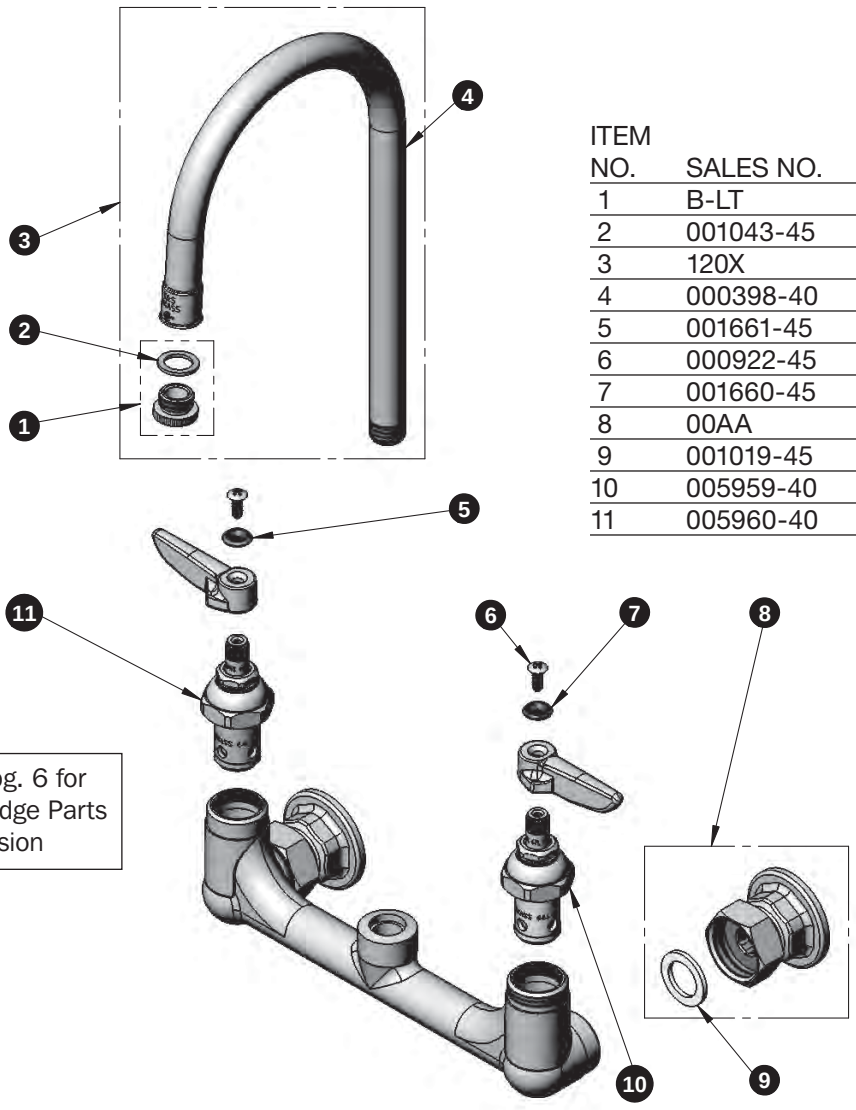

ITEM NO.	SALES NO.	DESCRIPTION
1	B-LT	Stream Regulator Outlet
2	001043-45	Washer
3	120X	Rigid Gooseneck w/ B-LT Tip
4	000398-40	Rigid Gooseneck
5	001661-45	Red Index-HW
6	000922-45	Lever Handle Screw
7	001660-45	Blue Index-CW
8	00AA	Wall Coupling Flange
9	001019-45	Coupling Nut Washer
10	005959-40	Eterna Cartridge - LTC
11	005960-40	Eterna Cartridge - RTC

See pg. 6 for Cartridge Parts Explosion