B-0509
Knee Action Pedal Valve

B-0509
Knee Action Pedal Valve Assembly, Wall Mount

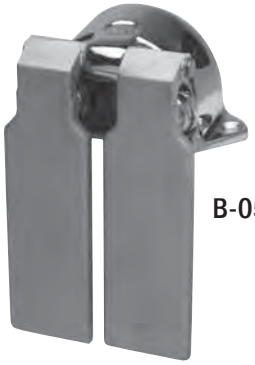

B-0509

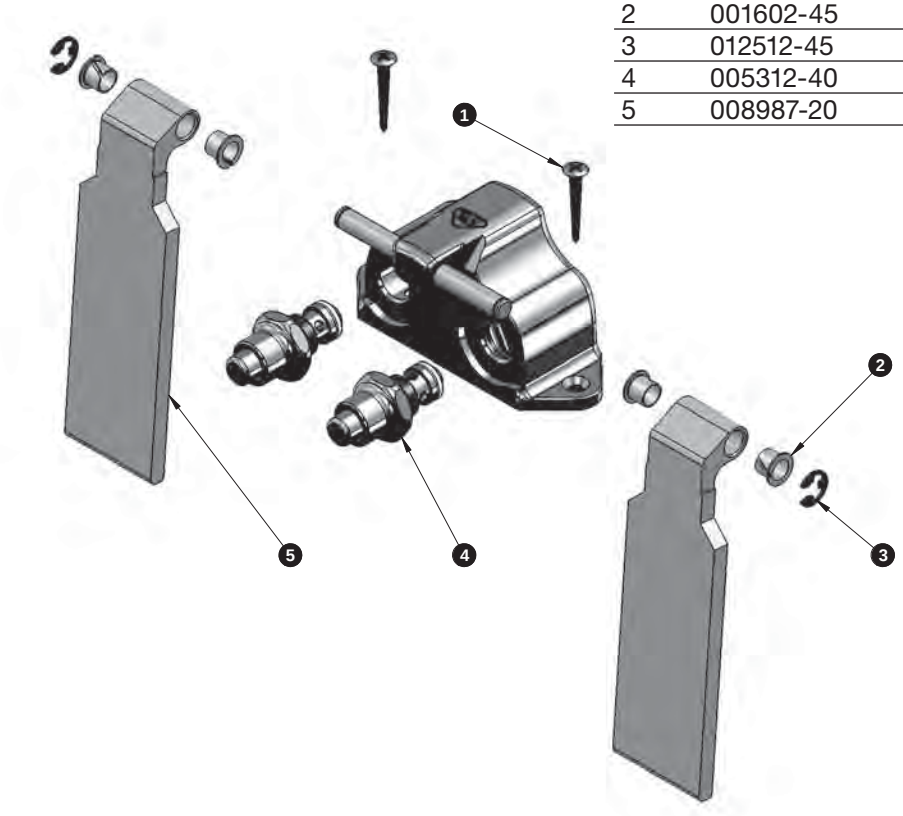

ITEM NO.	SALES NO.	DESCRIPTION
1	000915-45	Mounting Screw
2	001602-45	Bushing, Pedal Valve
3	012512-45	E-clip Retaining Ring
4	005312-40	Pedal Valve Bonnet Assembly
5	008987-20	Knee Pedal

RELIABILITY BUILT IN™

2 Saddleback Cove • P.O. Box 1088 • Travelers Rest, SC 29690
800-476-4103 • **www.tsbrass.com**