B-0655-BSTP and B-0655-BSTR

Service Sink Faucets

B-0655-BSTP (right)
Service Sink Faucet with Polished Chrome Finish, Built-In Stops, Lever Handles, Lower Wall Support Brace Assembly and Screws, 1/2" NPT Female Extended Inlets and Garden Hose Outlet

B-0655-BSTR
Same as B-0655-BSTP except with Rough Chrome Finish



B-0655-BSTP

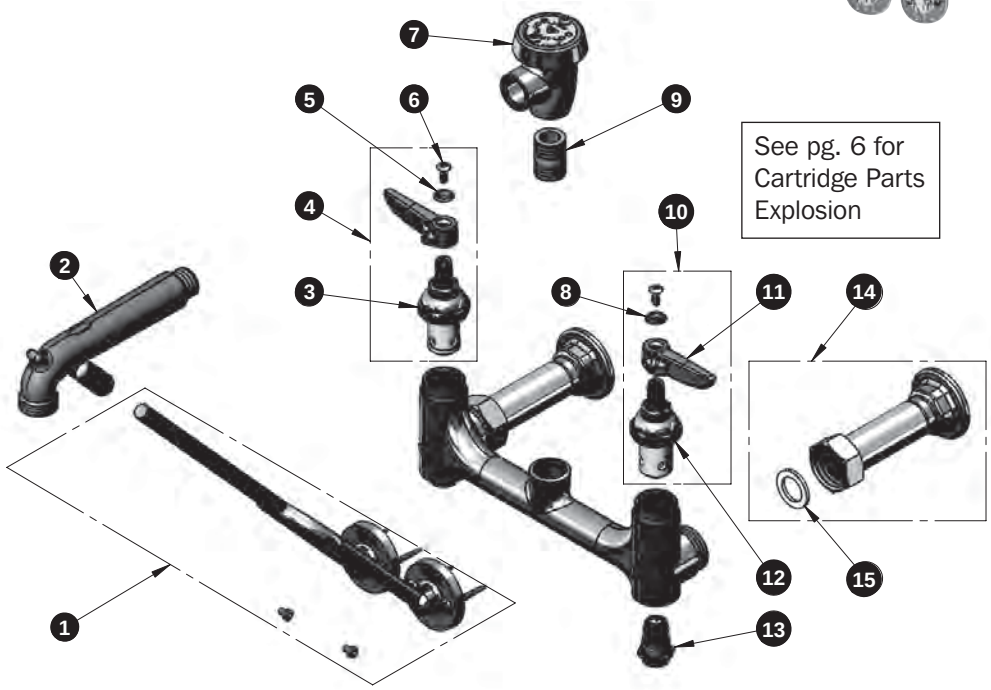

See pg. 6 for Cartridge Parts Explosion

ITEM NO.	SALES NO.	DESCRIPTION
1	009616-40	Lower Wall Support Assembly w/ Mounting Screws
2	016450-25	Spout Assembly Rough Chrome w/ Bottom Support Clevis (B-0655-BSTR)
	016450-40	Spout Assembly Polish Chrome w/ Bottom Support Clevis (B-0655-BSTP)
3	012443-40	Hot Eterna Spindle Assembly w/ Spring Check
4	002712-40	Hot Eterna Spindle Asm. w/ Spring Check, Handle, Index & Screw
5	001661-45	Red Index-HW
6	000922-45	Lever Handle Screw
7	B-0969	Vacuum Breaker, 1/2"
8	001660-45	Blue Index-CW
9	002534-25	Close Nipple, 1/2" x 1 5/32" Lg Rough Chrome
10	002711-40	Cold Eterna Spindle Asm. w/ Spring Check, Handle, Index & Screw
11	001638-45	Lever Handle
12	012442-40	Cold Eterna Spindle Assembly w/ Spring Check
13	163A	BST Assembly, 163A
14	B-0441	1/2" x 4" Extension Flange Inlet
15	001019-45	Coupling Nut Washer

RELIABILITY BUILT IN™

2 Saddleback Cove • P.O. Box 1088 • Travelers Rest, SC 29690
800-476-4103 • **www.tsbrass.com**