B-0710
Single Basin Faucet

B-0710
Single Temperature Basin Faucet with 1/2" NPSM Male Shank, 4-Arm Kitchen Handle and 2.2 GPM Aerator



B-0710

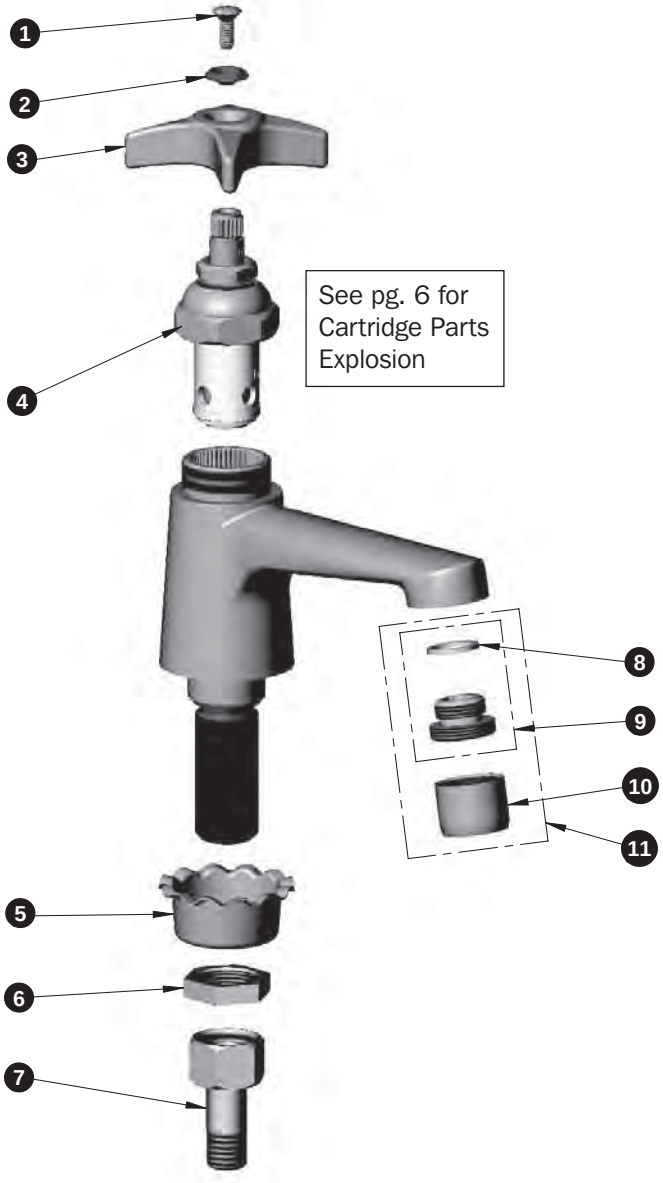

ITEM NO.	SALES NO.	DESCRIPTION
1	000922-45	Lever Handle Screw
2	001660-45	Blue Index-CW
3	002521-45	4-Arm Handle
4	005960-40	Eterna Spindle Asm, Hot
5	001000-45	Rosette Washer
6	002954-45	Shank Lock Nut
7	150A	Nut & Tailpiece
8	001043-45	Washer
9	044A	3/8" to Aerator Adapter
10	B-0199-01	2.2 GPM Aerator, Female
11	B-0199-02	2.2 GPM Aerator, 3/8" NPSM