B-0712 and B-0712-01
Push Button Metering Faucet


B-0712

B-0712
Single Temperature Basin Faucet with 1/2" NPSM Male Shank, Push Button Metering Cartridge and Handle and 2.2 GPM Aerator

B-0712-01
Same as B-0712 except with 4" Wrist Action Handle

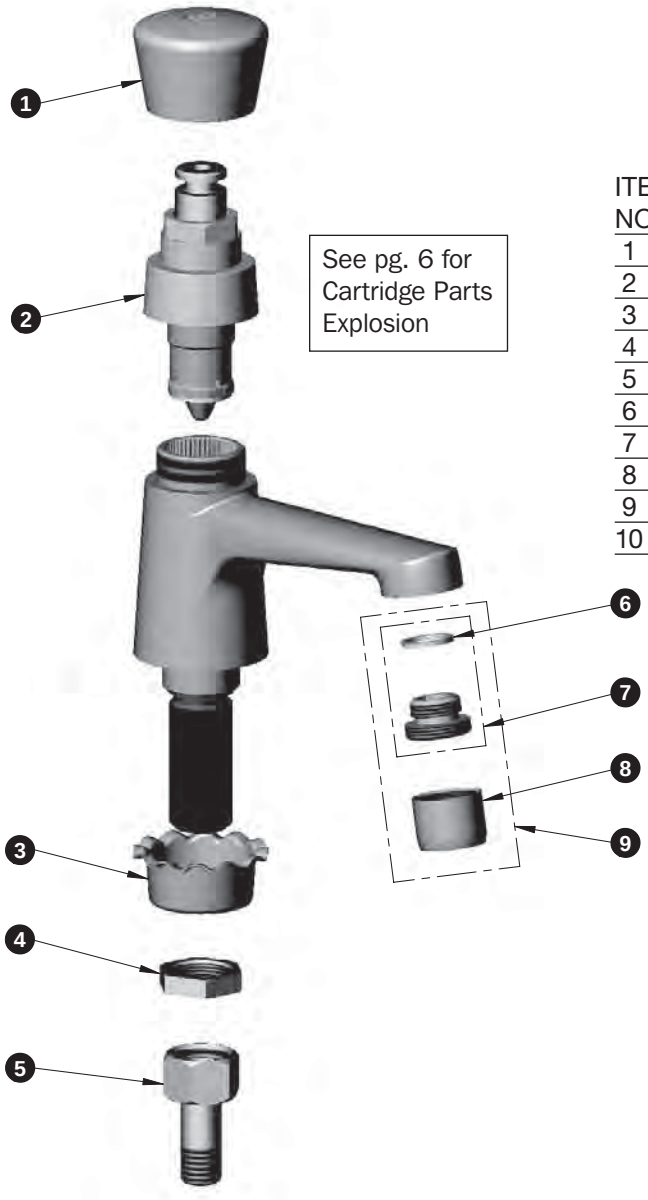

See pg. 6 for Cartridge Parts Explosion

ITEM NO.	SALES NO.	DESCRIPTION
1	014193-40	Push Button Cap Assembly
2	238A	Push Button Metering Cartridge
3	001000-45	Rosette Washer
4	002954-45	Shank Lock Nut
5	150A	Nut & Tailpiece
6	001043-45	Washer
7	044A	3/8" to Aerator Adapter
8	B-0199-01	2.2 GPM Aerator, Female
9	B-0199-02	Aerator, 2.2 GPM, 3/8" NPSM
10	014734-45	Spanner Bit