B-0800
Slow Self-Closing Single Temperature Faucet

B-0800
Wash Sink Wall Mount Metering Faucet with 1/2" NPT Female Inlet, Rosespray Outlet and Adjustable Flow


B-0800

See pg. 6 for Cartridge Parts Explosion

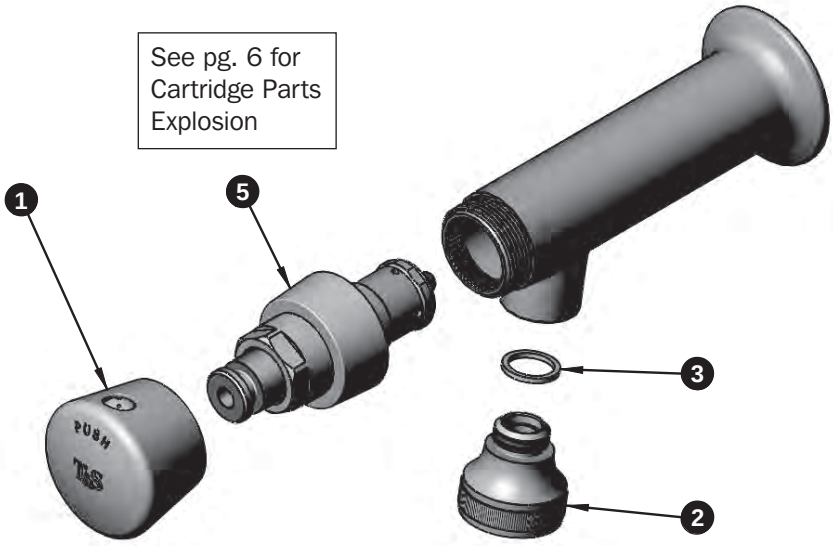



ITEM NO.	SALES NO.	DESCRIPTION
1	014193-40	Push Button Cap Assembly
2	B-0103	Rosespray Outlet
3	001043-45	Washer
4	014734-45	#8 Spanner Bit
5	238A	Push Button Metering Cartridge

RELIABILITY BUILT IN™

2 Saddleback Cove • P.O. Box 1088 • Travelers Rest, SC 29690
800-476-4103 • **www.tsbrass.com**