B-0831-PA
4” Centerset Metering Faucet

B-0831-PA
4” Centerset Metering and Mixing Faucet with Pivot Action Metering Cartridges and 2.2 GPM Aerator



B-0831

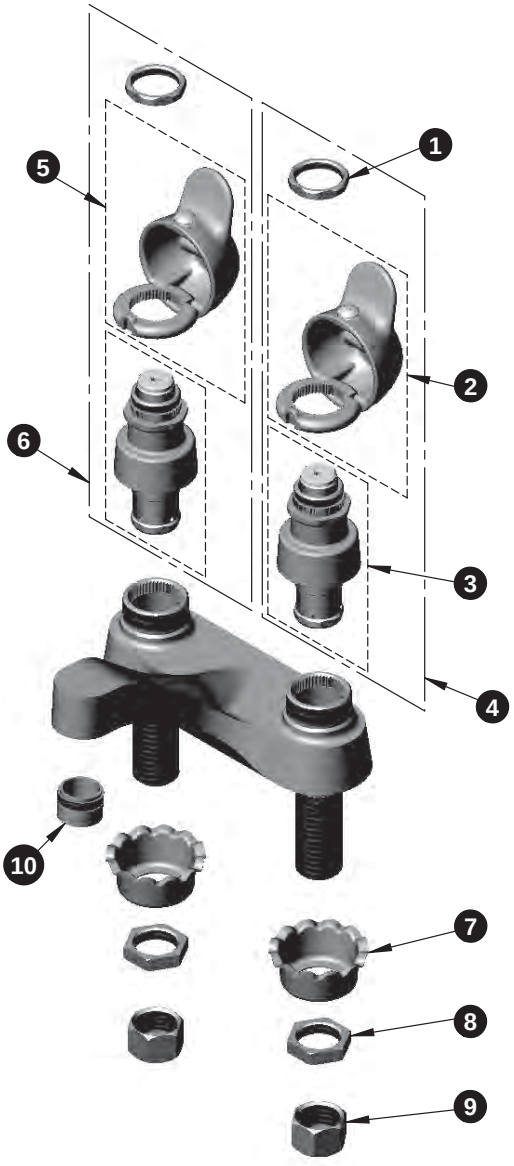

ITEM NO.	SALES NO.	DESCRIPTION
1	PA-N	Retaining Nut
2	PA-C	Cold Pivot Action Handle Assembly w/ Retaining Nut and Spanner Bit
3	238A-PA	Pivot Action Metering Cartridge w/ Retaining nut
4	238AC-PA	Pivot Action Metering Cartridge w/ Cold Pivot Action Handle, Retaining Nut and Spanner Bit
5	PA-H	Hot Pivot Action Handle Asm. w/ Retaining Nut and Spanner Bit
6	238AH-PA	Pivot Action Metering Cartridge w/ Hot Pivot Action Handle, Retaining Nut and Spanner Bit
7	001000-45	Rosette Washer
8	002954-45	Shank Lock Nut
9	000958-20	Coupling Nut
10	B-0199-03	2.2 GPM Aerator

Spanner Bit
(014734-45)



Pivot Action Handle Vandal-Resistant Screw
(016654-45)

