B-0871
Centerset Mixing Faucet



B-0871

B-0871
4" Centerset Commercial Mixing Faucet with Eterna Cartridges, Lever Handles and 2.2 GPM Aerator

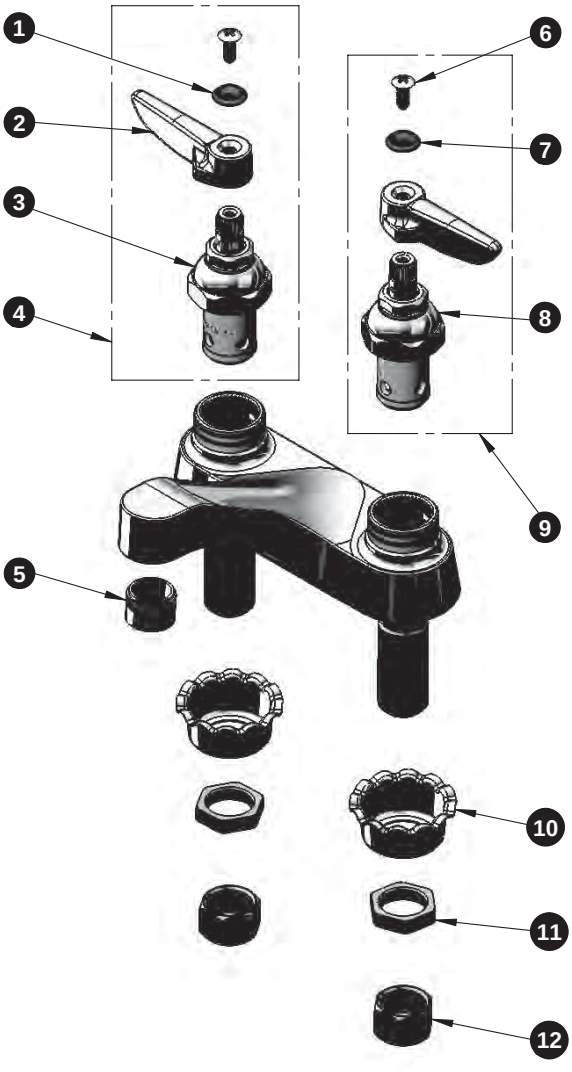

ITEM NO.	SALES NO.	DESCRIPTION
1	001661-45	Red Index-HW
2	001638-45	Lever Handle
3	005960-40	Spindle Asm. Eterna "Hot"
4	002714-40	Hot Eterna Spindle Asm. w/ Handle, Index & Screw
5	B-0199-03	2.2 GPM Aerator
6	000922-45	Lever Handle Screw
7	001660-45	Blue Index-CW
8	005959-40	Spindle Asm. Eterna "Cold"
9	002713-40	Cold Eterna Spindle Asm. w/ Handle, Index & Screw
10	001000-45	Rosette Washer
11	002954-45	Shank Lock Nut
12	000958-20	Coupling Nut

See pg. 6 for Cartridge Parts Explosion

RELIABILITY BUILT IN™

2 Saddleback Cove • P.O. Box 1088 • Travelers Rest, SC 29690
800-476-4103 • **www.tsbrass.com**