B-0893
Centerset Mixing Faucet



B-0893
4" Centerset Mixing Faucet with 1/2" NPSM Male Inlet Shanks, Eterna Cartridges, 4" Wrist Action Handles, Rigid Gooseneck and 2.2 GPM Aerator and Pop-Up Drain Assembly

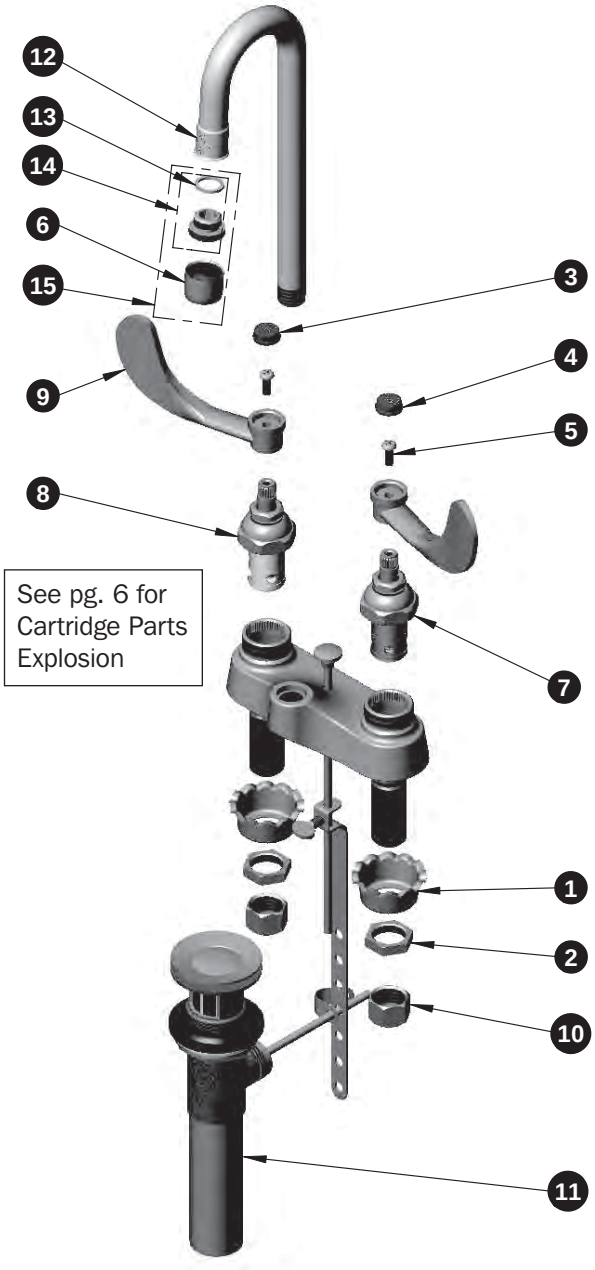

See pg. 6 for Cartridge Parts Explosion

ITEM NO.	SALES NO.	DESCRIPTION
1	001000-45	Rosette Washer
2	002954-45	Shank Lock Nut
3	001194-45	Red HW Index
4	001686-45	Blue CW Index
5	000925-45	Screw
6	B-0199-01	2.2 GPM Female Aerator
7	006009-40	Cold Spindle Assembly
8	006010-40	Hot Spindle Assembly
9	B-WH4	4" Wrist Action Handle
10	000958-20	Coupling Nut
11	B-0898	Pop-Up Drain Assembly
12	000393-40	Gooseneck
13	001043-45	Washer
14	044A	3/8" to Aerator Adapter
15	B-0199-02	Aerator, 2.2 GPM, 3/8" NPSM