B-1110 and B-1110-LN
Workboard Faucets

B-1110
Workboard Faucet, Deck Mount with with 4" Centers, Lever Handles, 6" Swing Nozzle Assembly, B-PT Stream Regulator, Polished Chrome Plated Escutcheon and 1/2" NPT Male Shanks

B-1110-LN
Same as B-1110 except without Swing Nozzle Assembly


B-1110

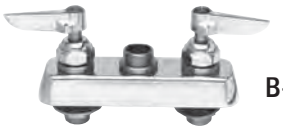
B-1110-LN

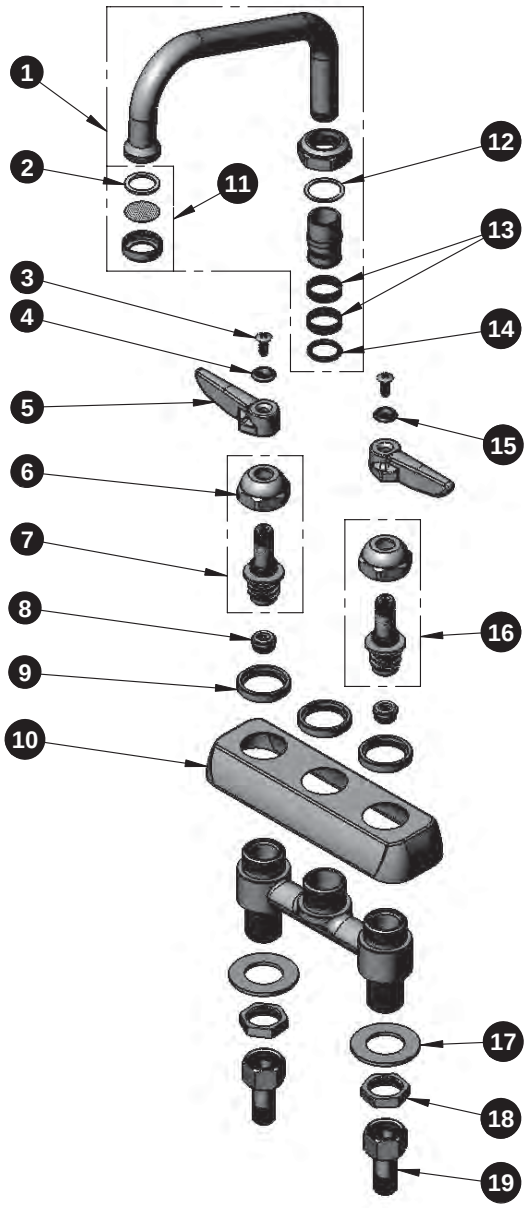

ITEM NO.	SALES NO.	DESCRIPTION
1	059X	6" Swing Nozzle Assembly
2	001048-45	Nozzle Tip Washer
3	000922-45	Lever Handle Screw
4	001661-45	Red Index-HW
5	001638-45	Lever Handle
6	009749-25	Bonnet Nut
7	009753-25	Spindle Assembly - RTC
8	000763-20	Seat
9	000712-25	Escutcheon Lock Nut
10	001258-40	Escutcheon
11	B-PT	Stream Regulator Outlet
12	009538-45	Swivel Washer
13	011429-45	Swivel Sleeve (2)
14	001074-45	O-Ring
15	001660-45	Blue Index-CW
16	009754-25	Spindle Assembly - LTC
17	000999-45	Brass Lock Washer
18	002954-45	Shank Lock Nut
19	150A	Bag of (1) Nut & (1) Tailpiece

RELIABILITY BUILT IN™
2 Saddleback Cove • P.O. Box 1088 • Travelers Rest, SC 29690
800-476-4103 • **www.tsbrass.com**